Butch LED Floodlight 75W / 150W

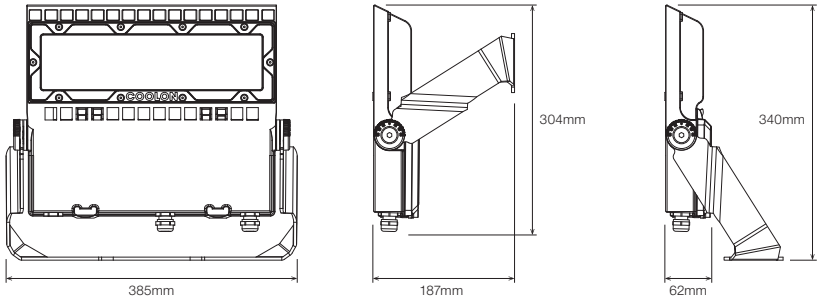

Technical Specifications

Voltage In
200 – 440VAC 50/60Hz

Power
85W / 160W

IP/IK Rating
IP66 / IK09

Operating Temperature
-20 to +50°C

Butch LED Floodlight 240W

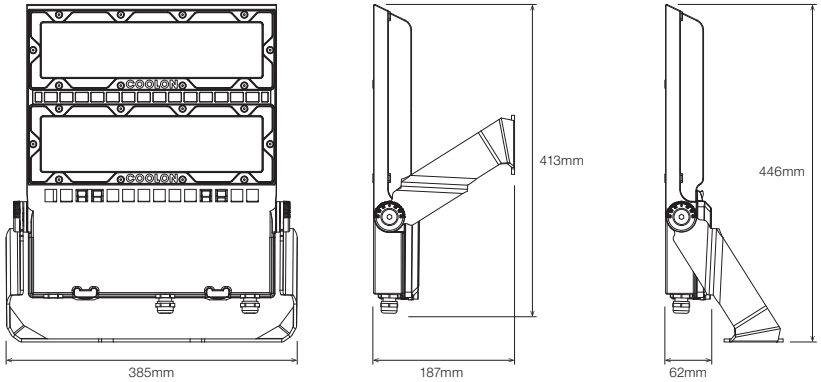

Technical Specifications

Voltage In
200 – 440VAC 50/60Hz

Power
250W

IP/IK Rating
IP66 / IK09

Operating Temperature
-20 to +50°C

Bracket Footprint

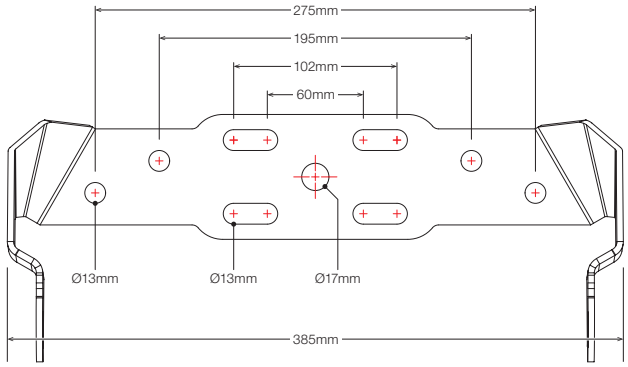

U-Bolt Pole Mounting Clamp Kit (Optional)

The U-Bolt Pole Mounting Clamp Kit is specifically designed for mounting products with a flat mounting surface on a variety of circular poles that are widely used in the industry.

For more information visit:
https://www.coolon.com.au/dl/ind-acc-u-bolt-pmc

WIRING DIAGRAM

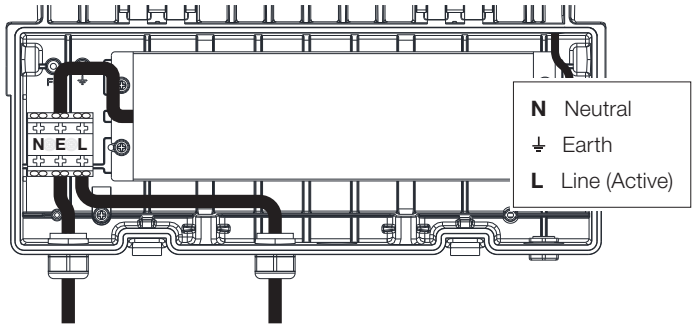

AC INPUT
M20 Cable Gland
Wire diameter
Ø7–10mm

AC OUTPUT
M20 Cable Gland
Wire diameter
Ø7–10mm

⚠ ATTENTION

Excessive and prolonged obstruction of the optical surface may result in associated damage which is not covered by warranty.

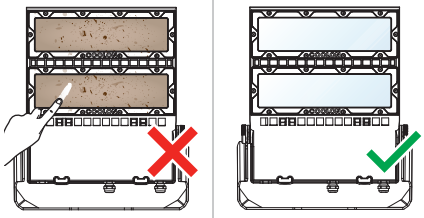

As a matter of continual improvement, the requirements and recommendations in our manuals evolve to reflect new industry requirements and the latest feedback from the field.
The Coolon team is working hard to ensure optimal product operation and the safety of all users, please check our website periodically to ensure you are up to date with the latest information.
Product must be installed by a suitably qualified person. All documentation is subject to change without notice.

MOUNTING

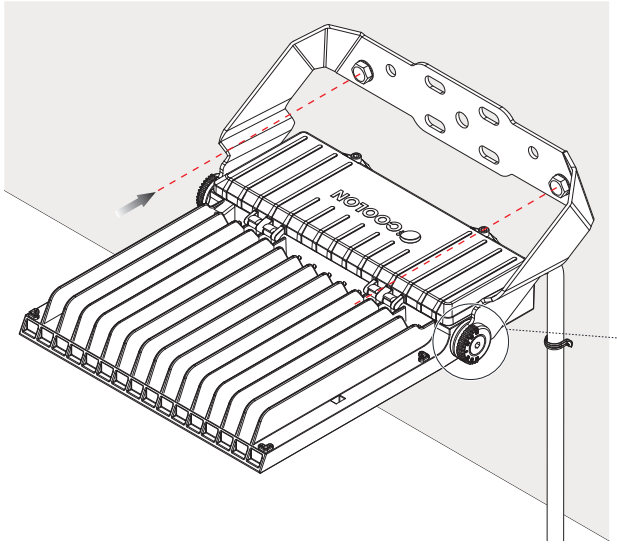

The mounting bracket allows for a flat surface and pole mounting. When mounting to a flat surface, secure using a minimum of 2x M10 bolts. When mounting to a pole use a U-Bolt Pole Mounting Clamp Kit.

NOTE: In order to adjust bracket angle the bracket armlock teeth must be separated completely from the housing.

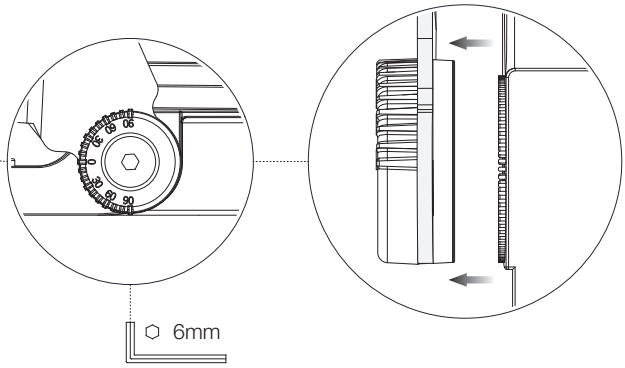

Mounting to comply with Dark Sky (DS43)

When mounting to comply with Dark Sky (DS43) **BLF-150-WWT-T4-MP** or **BLF-240-WWT-T4-MP** ensure the luminaire is mounted horizontally

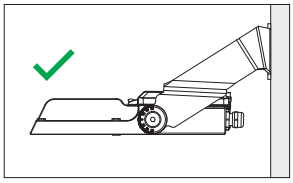

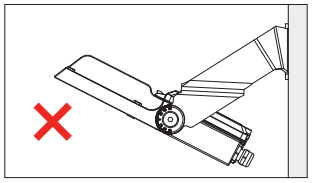

Lanyard Anchor Points

If the use of a secondary retention device (lanyard, wire rope, tether, etc.) is deemed necessary, it can be attached to the bracket or to the luminaire fins (between the driver and LED compartments). Ensure the secondary retention device is rated for 3-5 times the weight of the product, and the slack minimises the drop distance (not exceeding 30cm / 1ft). A secondary retention device is not included with the luminaire.

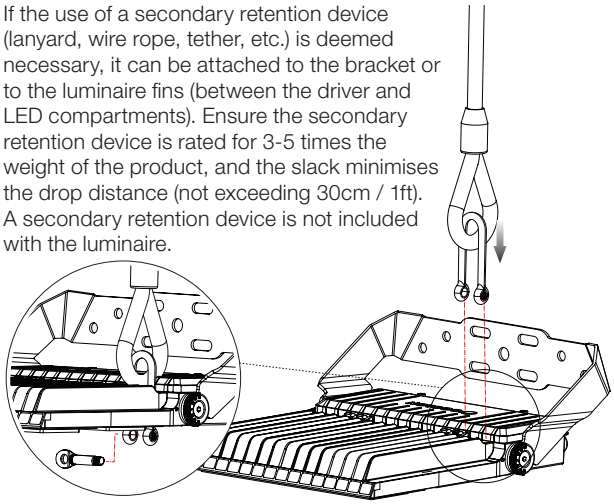

Butch LED Floodlight 75W / 150W

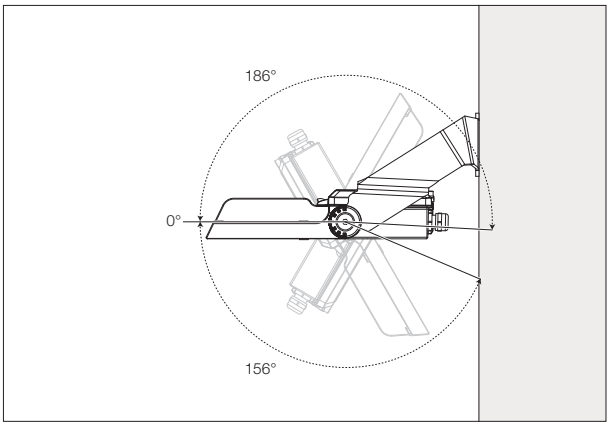

Butch LED Floodlight 240W

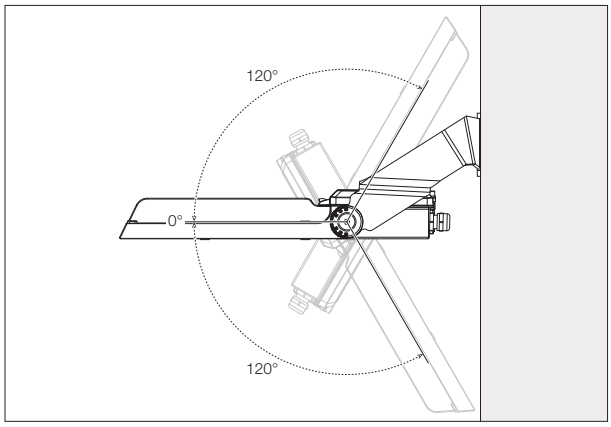

IMPORTANT

Primary use: commercial and industrial applications.

- Read through this manual before installation
- Handle the product with care
- Class I products must be grounded
- The product must be installed by a suitably qualified person
- Do not stare at operating lamp, may be harmful to the eyes
- Turn OFF the power before installation and maintenance
- Make sure the product is securely installed
- The housing might become hot after operation
- Keep optical face clean

As a matter of continual improvement, the requirements and recommendations in our manuals evolve to reflect new industry requirements and the latest feedback from the field.
The Coolon team is working hard to ensure optimal product operation and the safety of all users, please check our website periodically to ensure you are up to date with the latest information.
Product must be installed by a suitably qualified person. All documentation is subject to change without notice.