COOLON

PLUME 10 DC RGBW

SPOT LIGHT | SPT-PLUME 10 DC RGBW

Plume 10 DC RGBW is a compact exterior spotlight engineered for vibrant colour changing effects and precision accent lighting. Designed to punch above its weight, it utilizes high-performance optics to graze textures, highlight architectural columns, and accentuate landscape features with exceptional control. The unit is powered from an external SELV source, and the inclusion of weatherproof cable extensions and splitters ensures ample layout possibilities. Control via on-board Casambi makes both installation and wireless operation effortless.

POWER (DC)

10W
10W

BLK · Black Anodised

BRS · Brass Anodised

BNA · Brushed Natural Anodised

RGBW FULL COLOUR

CONTROL OPTIONS

CASAMBI

DALI

DMX

INSTALLATION MANUAL
Scan the QR Code or visit www.coolon.com.au/dl/arch-spt-plume-10-dc-manual

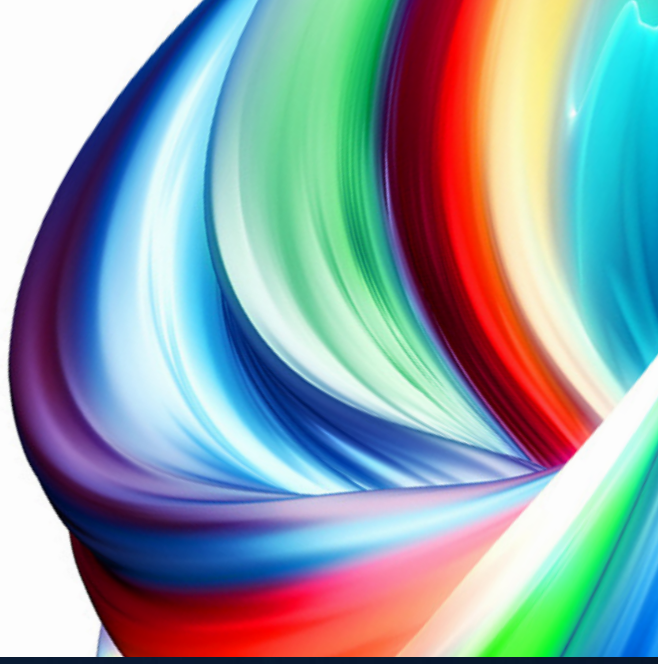

RGBW

Our RGBW quad chip delivers outstanding lumen output within a single chip, which is effectively collimated with precise optics. Behold intensely saturated and uniform colour from this compact luminaire.

CASAMBI

Casambi Bluetooth offers wireless control of the Plume RGBW luminaire. Do away with sophisticated control systems by utilizing a smartphone and Casambi application. Simply set up and control the Plume RGBW as desired.

DALI and DMX supported via external controllers.

L70

LONG OPERATING LIFE

Coolon products use the world's most reputable LED manufacturers and the latest available standards to adequately report lumen maintenance. We strive to drive LEDs under their nominal current and use state-of-the-art heat dissipation methods, leading to durable electronics.

ADVANCED QUAD CHIP LEDS

Multi-colour LED that provides high lumen output in a small package. A small optical source for excellent optical control and efficient colour mixing can reduce LED system complexity by reducing the number of components required.

5 YEARS

5 YEARS WARRANTY

Coolon luminaires are covered by a solid comprehensive manufacturer's warranty that covers a range of possible defects and performance parameters throughout the duration of the warranty period.

PROUDLY MADE IN AUSTRALIA

Our products are designed and manufactured in Australia. Engineered to perfection, using only the highest quality components and highly skilled labour, each luminaire is assembled and thoroughly tested to ensure that it exceeds the highest standards.

TECHNICAL SPECIFICATIONS

Product Code	SPT- PLUME 10 DC RGBW
Lumen Output (White LED)	234 lm / 10D-SC
Nominal Power	10W
Description	Plume 10 DC RGBW Spotlight
Body	Aluminium Alloy Body
Finish	Brushed Natural / Brass / Black Anodised
Cover	Tempered Glass
Endcap	Polycarbonate
LEDs per Luminaire	1 unit / 4 in 1 RGBW LEDs
Input Voltage Range	23 – 48VDC
Recommended Supply Voltage	48VDC
Max. Input Power	12W
Dimming / Control	Casambi onboard, DALI/DMX supported via external converters
External Heatsink Required	No
Ambient Operating Temperature	Ta -10°C to 50°C
Reported Lumen Maintenance TM21-11 (@ Ts = 90°C, If = 1500mA)	PBED-20FTE-SRGBV L90 (6K) = 13,000 hours L70 (6K) > 33,000 hours Plume 10 DC RGBW max. operating values (@ Ts = 85°C, If = 1500mA)
Max. # of Units per Run	Up to 35 Units @ 48VDC Up to 30 Units @ 42VDC Up to 25 Units @ 30VDC Up to 10 Units @ 24VDC (Ensure distances and loads allow the for operating voltage above 23V)
Approvals	CE, CB, RCM
IP Rating	IP66 (Standard) - Not including Wiring / Connector
IK Rating	IK07 (Standard) - Not including Wiring / Connector
Weight	543g With No Acessories 735g With SMB · Surface Mounting Bracket 662g With BJMB · Ball Joint Mounting Bracket 706g With SPIKE · Spike Mount 42g Anti Glare Visor

The Bluetooth radio signal from the devices can be limited by its surroundings (In some situations the range of a Bluetooth signal can be dramatically reduced if a device is installed in a metal enclosure, or if thick stone walls or other possible constructional restrictions are affecting the signal strength coming from the device).

POWER & LUMEN OUTPUT

PLUME RGBW SC	POWER	07D	10D	15D	30D	56D	O3511D
Red	5.4W	170 lm	148 lm	128 lm	98.9 lm	107 lm	124 lm
Green	5.6W	220 lm	215 lm	211 lm	161 lm	176 lm	189 lm
Blue	5.6W	85 lm	69.6 lm	57.3 lm	44.1 lm	46.5 lm	54.4 lm
White	6.4W	237 lm	234 lm	216 lm	182 lm	195 lm	221 lm
Yellow	9.8W	333 lm	321 lm	303 lm	236 lm	258 lm	286 lm
Magenta	9.9W	201 lm	171 lm	157 lm	127 lm	137 lm	158 lm
Cyan	10.2W	282 lm	270 lm	258 lm	200 lm	217 lm	237 lm

PLUME RGBW HM	POWER	07D	10D	15D	30D	56D	O3511D
Red	5.4W	122 lm	102 lm	95.4 lm	67.5 lm	62.8 lm	88.5 lm
Green	5.6W	168 lm	189 lm	171 lm	107 lm	100 lm	126 lm
Blue	5.6W	58.5 lm	60.6 lm	49.8 lm	30.4 lm	27.7 lm	39.4 lm
White	6.4W	149 lm	165 lm	142 lm	120 lm	121 lm	149 lm
Yellow	9.8W	243 lm	275 lm	210 lm	164 lm	153 lm	199 lm
Magenta	9.9W	140 lm	153 lm	122 lm	87 lm	84.6 lm	120 lm
Cyan	10.2W	233 lm	223 lm	194 lm	135 lm	125 lm	160 lm

DIMENSIONS

SURFACE MOUNT BRACKET

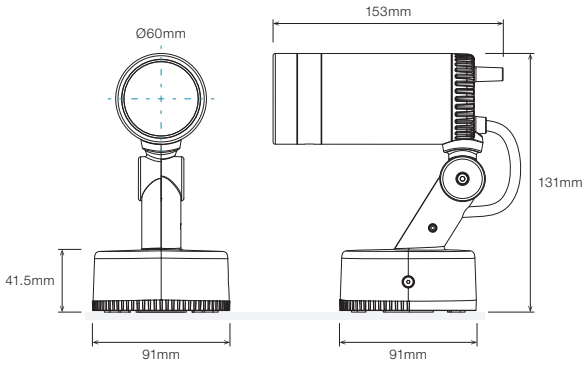

SURFACE MOUNT BRACKET WITH ANTI GLARE VISOR

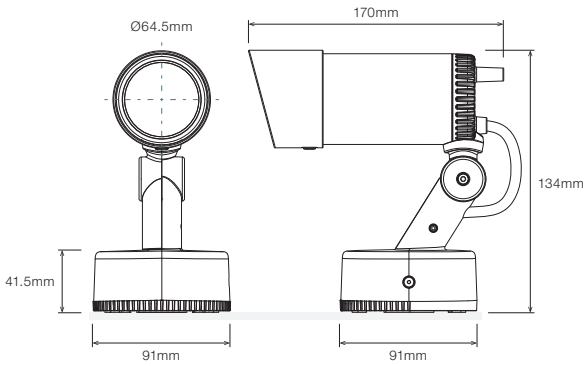

SURFACE MOUNT BRACKET ROTATION

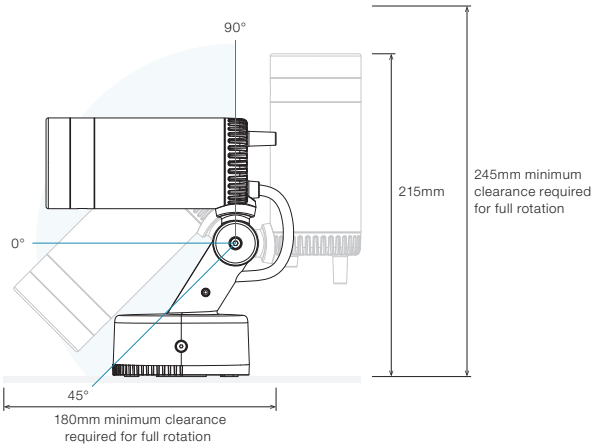

DIMENSIONS

BALL JOINT MOUNTING BRACKET

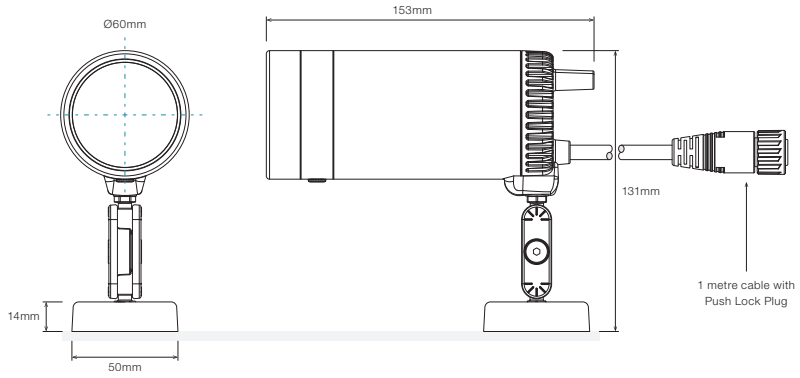

BALL JOINT MOUNTING BRACKET WITH ANTI GLARE VISOR

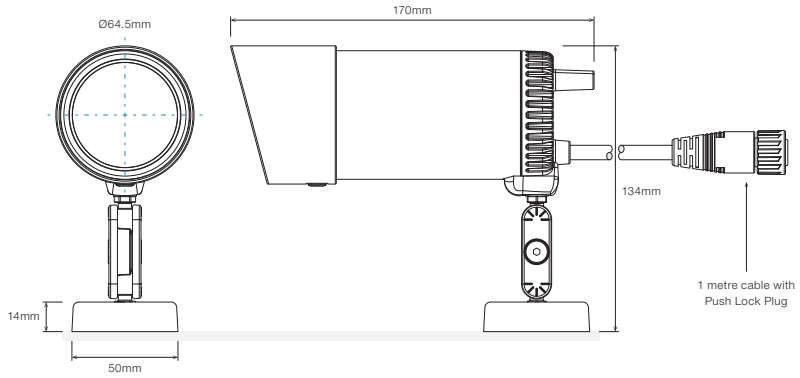

BALL JOINT MOUNTING BRACKET ROTATION

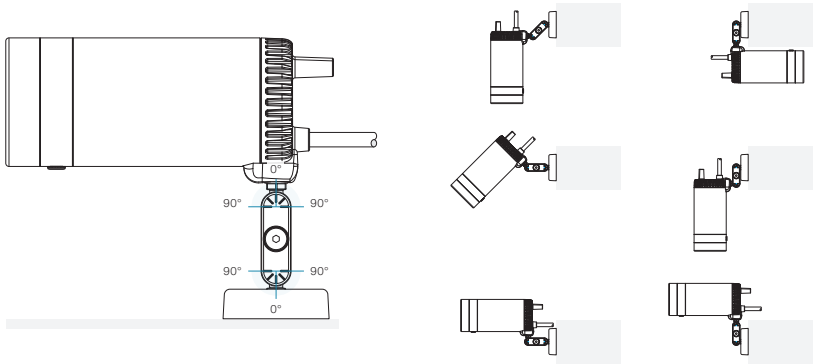

DIMENSIONS

SPIKE MOUNT

ACC-PLUME-SPIKE265-BLK

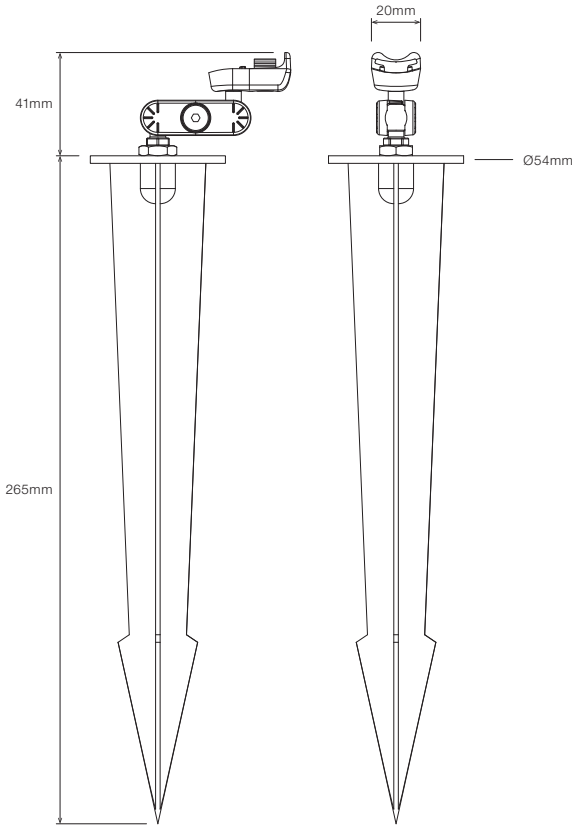

F TYPE SPLITTER 1X IN, 2X OUT

CBL-SPT-OC2_1M2F-DC-SPLJ-IP67-0.5M

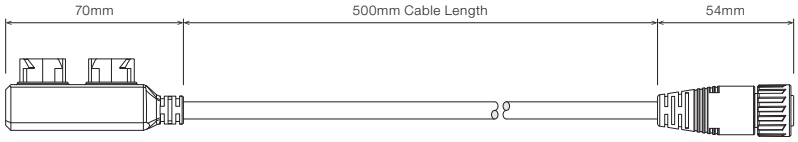

F TYPE SPLITTER 1X IN, 4X OUT

CBL-SPT-OC2_1M4F-DC-SPLJ-IP67-0.5M

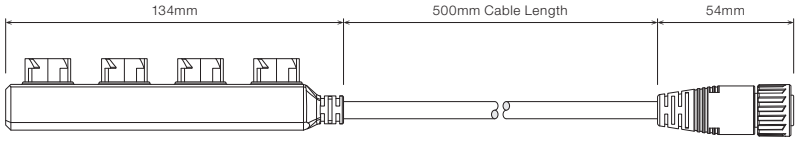

POLAR DISTRIBUTION

OPTIC		POLAR DISTRIBUTION
07D Narrow Beam 7° Beam Angle	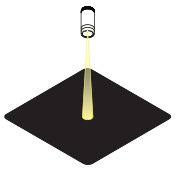	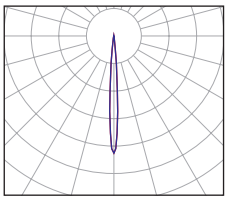
10D Narrow Beam 10° Beam Angle	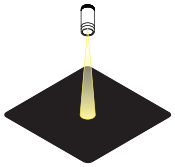	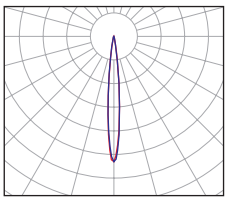
15D Medium Beam 15° Beam Angle	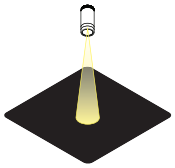	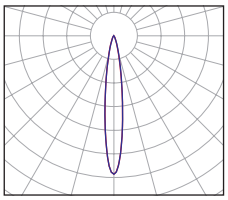
30D Medium Beam 30° Beam Angle	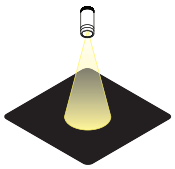	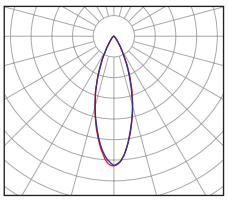
56D Wide Beam 56° Beam Angle	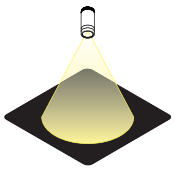	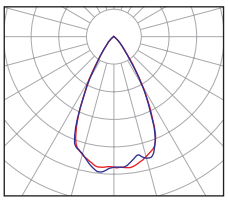
O3511D Oval Beam Oval 35° x 11° Beam Angle	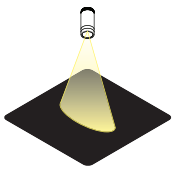	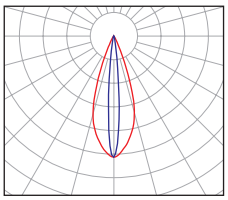

IP RATING

IP66

Fully protected against dust.
Protected against wave-like
water jets from all directions.

WIRING DIAGRAMS (POWER)

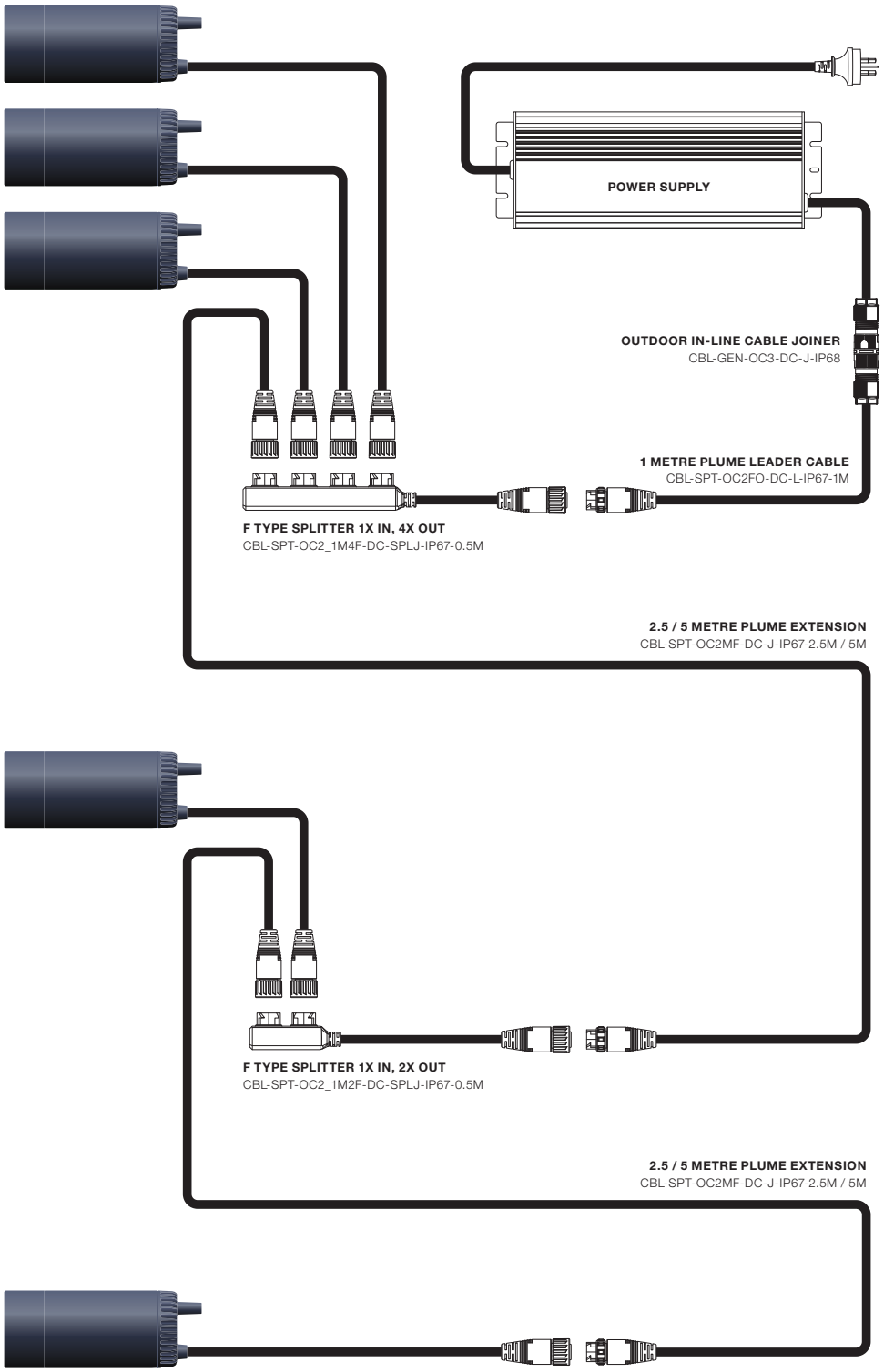

Splitters and extensions can be used as required within the following limits:

DC wiring from power supply to last unit: Up to 20 metres @48V / Up to 5 metres @24V.

Max. # of units per run: Up to 35 Units @ 48V / Up to 30 Units @ 42V / Up to 25 Units @ 30V / Up to 10 Units @ 24V.

Uncoil all cables. 10A max through current.

Consult Coolon for special wiring requirements.

WIRING DIAGRAMS (CONTROL)

CASAMBI INSTALLATION

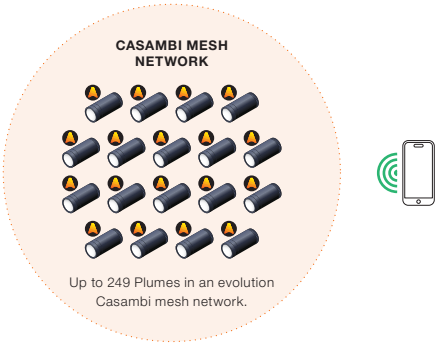

Plume not recommended for Classic Casambi Networks

NEW DALI INSTALLATION

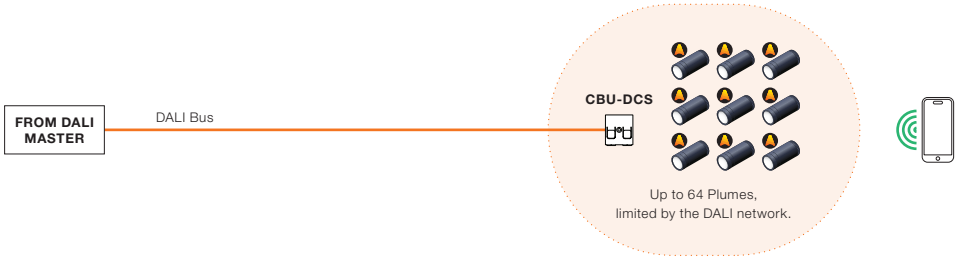

Max total luminaires + input devices is the same for one DALI network (CBU-DCS not included)

EXPAND EXISTING DALI INSTALLATION

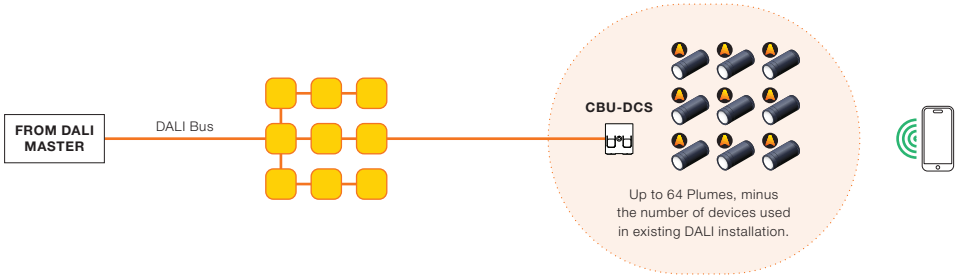

Max total luminaires + input devices is the same for one DALI network (CBU-DCS not included)

DMX INSTALLATION

DMX as casambi scene trigger

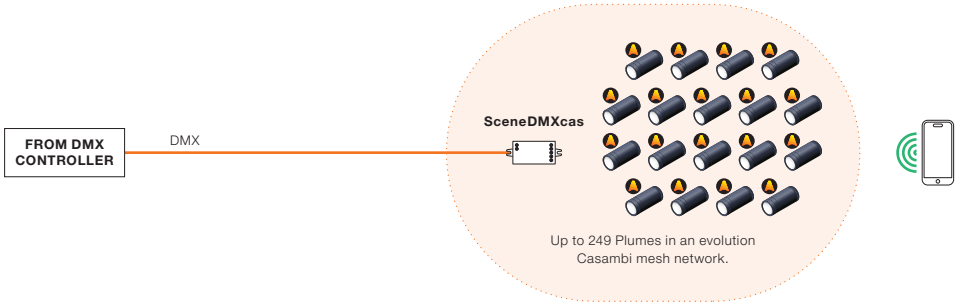

SceneDMXcas provides scene and intensity selection for up to 20 pre-defined Casambi scenes.

The DMX Start Address for each SceneDMXcas is user selectable.

SceneDMXcas can be configured with the Casambi app.

SceneDMXcas requires an external 12 – 24VDC Class 2 power supply.

Please refer to SceneDMXcas documentation for detailed instructions.

ORDERING EXAMPLE

SPT-PLUME 10 DC RGBW - 30D - HL - BLK - SMB

TYPE
OPTIC
INTERNAL LOUVRE
BODY COLOUR
MOUNTING

OPTIC	
07D	7° Beam (Far Throw Collimation)
10D	10° Beam
15D	15° Beam
30D	30° Beam
56D	56° Beam
O3511D	Oval 35° x 11° Beam

INTERNAL LOUVRE	
SC	Standard Clear
HL	Honeycomb Louvre

BODY COLOUR	
BLK	Black Anodised
BRS	Brass Anodised
BNA	Brushed Natural Anodised

MOUNTING	
NA	No Mounting Included
SMB	Surface Mounting Bracket
BJMB	Ball Joint Mounting Bracket

ACCESSORIES

	PRODUCT CODE	DESCRIPTION
ACCESSORIES		
	ACC-PLUME-AGBL	Anti Glare Visor Black
	ACC-PLUME-SPIKE265-BLK	Spike Mount 265mm Long, Black
	CBL-SPT-OC2_1M2F-DC-SPLJ-IP67-0.5M	F Type Splitter 1x IN, 2x OUT
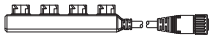	CBL-SPT-OC2_1M4F-DC-SPLJ-IP67-0.5M	F Type Splitter 1x IN, 4x OUT
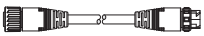	CBL-SPT-OC2MF-DC-J-IP67-2.5M	2.5 metre Plume Extension
	CBL-SPT-OC2MF-DC-J-IP67-5M	5.0 metre Plume Extension
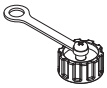	CBL-SPT-OC_M16-DC-T-IP67	Waterproof Cap
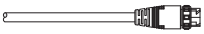	CBL-SPT-OC2FO-DC-L-IP67-1M	1 metre Plume Leader Cable
	CBL-GEN-OC3-DC-J-IP68	Outdoor In-line Cable Joiner
POWER SUPPLY		
	PWR-HLG-100H-48AU	Mean Well Power Supply HLG 100W 48V IP67
	PWR-HLG-150H-48AU	Mean Well Power Supply HLG 150W 48V IP67
	PWR-HLG-240H-48AU	Mean Well Power Supply HLG 240W 48V IP67
	PWR-HLG-320H-48AU	Mean Well Power Supply HLG 320W 48V IP67
	PWR-HLG-480H-48	Mean Well Power Supply HLG 480W 48V IP67, No AU plug