COOLON

PLUME 10 AC RGBW

SPOT LIGHT | SPT-PLUME 10 AC RGBW

Plume 10 AC RGBW is a compact exterior spotlight engineered for vibrant colour changing effects and precision accent lighting. Designed to punch above its weight, it utilizes high-performance optics to graze textures, highlight architectural columns, and accentuate landscape features with exceptional control. It features an integrated AC power supply and control via on-board Casambi, making installation and wireless operation effortless.

POWER (AC)

10W
10W

BLK · Black Anodised

BRS · Brass Anodised

BNA · Brushed Natural Anodised

RGBW FULL COLOUR

CONTROL OPTIONS

CASAMBI

DALI

DMX

INSTALLATION MANUAL
Scan the QR Code or visit www.coolon.com.au/dl/arch-spt-plume-10-ac-manual

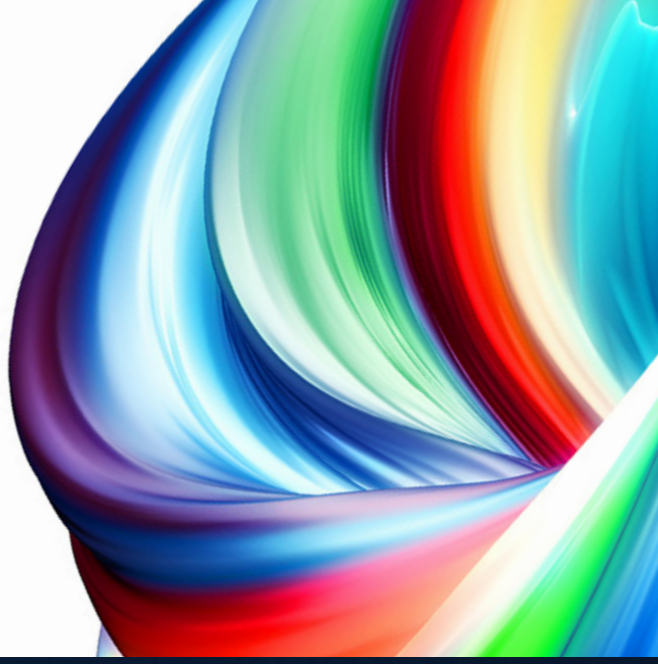

RGBW

Our RGBW quad chip delivers outstanding lumen output within a single chip, which is effectively collimated with precise and superior optics. Behold intensely saturated and uniform colour from this compact luminaire.

CASAMBI

Casambi Bluetooth offers wireless control of the Plume RGBW luminaire. Do away with sophisticated control systems by utilizing a smartphone and Casambi application. Simply set up and control the Plume RGBW as desired.

DALI and DMX supported via external controllers.

L70

LONG OPERATING LIFE

Coolon products use the world's most reputable LED manufacturers and the latest available standards to adequately report lumen maintenance. We strive to drive LEDs under their nominal current and use state-of-the-art heat dissipation methods, leading to durable electronics.

ADVANCED QUAD CHIP LEDS

Multi-colour LED that provides high lumen output in a small package. A small optical source for excellent optical control and efficient colour mixing can reduce LED system complexity by reducing the number of components required.

5 YEARS

5 YEARS WARRANTY

Coolon luminaires are covered by a solid comprehensive manufacturer's warranty that covers a range of possible defects and performance parameters throughout the duration of the warranty period.

PROUDLY MADE IN AUSTRALIA

Our products are designed and manufactured in Australia. Engineered to perfection, using only the highest quality components and highly skilled labour, each luminaire is assembled and thoroughly tested to ensure that it exceeds the highest standards.

TECHNICAL SPECIFICATIONS

Product Code	SPT- PLUME 10 AC RGBW
Lumen Output (White LED)	196 lm / 10D-SC
Nominal Power	10W
Description	Plume 10 AC RGBW Spotlight
Body	Aluminium Alloy Body
Finish	Brushed Natural / Brass / Black Anodised
Cover	Glass
Endcap	Polycarbonate
LEDs per Luminaire	1 unit / 4 in 1 RGBW LEDs
Input Voltage	120 – 250VAC
Input Frequency Range	47 – 63Hz
Inrush Current	Meets NEMA-410 requirements
Leakage Current	< 250 µA @ 250VAC
Max. Input Power	12W
Dimming / Control	Casambi onboard, DALI/DMX supported via external converters
External Heatsink Required	No
Ambient Operating Temperature	Ta -10°C to 50°C
Reported Lumen Maintenance TM21-11 (@ Ts = 90°C, If = 1500mA)	PBED-20FTE-SRGBV L90 (6K) = 13,000 hours L70 (6K) > 33,000 hours Plume 10 AC RGBW max. operating values (@ Ts = 85°C, If = 1500mA)
IP Rating	IP66 (Standard) - Not including Connectors
IK Rating	IK07 (Standard) - Not including Wiring / Connector
Weight	633g With No Acessories 825g With SMB · Surface Mounting Bracket 751g With BJMB · Ball Joint Mounting Bracket 619g With TRMB · Track Mounting Bracket 42g Anti Glare Visor

The Bluetooth radio signal from the devices can be limited by its surroundings (In some situations the range of a Bluetooth signal can be dramatically reduced if a device is installed in a metal enclosure, or if thick stone walls or other possible constructional restrictions are affecting the signal strength coming from the device).

POWER & LUMEN OUTPUT

PLUME RGBW SC	POWER	07D	10D	15D	30D	56D	O3511D
Red	5W	100 lm	108 lm	84 lm	77 lm	65 lm	101 lm
Green	5.8W	163 lm	176 lm	144 lm	125 lm	137 lm	200 lm
Blue	5.8W	50 lm	54 lm	46 lm	36 lm	37 lm	66 lm
White	5.8W	184 lm	196 lm	165 lm	146 lm	154 lm	248 lm
Yellow	9.3W	237 lm	261 lm	207 lm	187 lm	189 lm	274 lm
Magenta	9.5W	115 lm	125 lm	106 lm	98 lm	93 lm	146 lm
Cyan	10W	202 lm	219 lm	183 lm	158 lm	173 lm	260 lm

PLUME RGBW HM	POWER	07D	10D	15D	30D	56D	O3511D
Red	5W	60 lm	65 lm	50 lm	46 lm	39 lm	60 lm
Green	5.8W	105 lm	114 lm	93 lm	81 lm	89 lm	130 lm
Blue	5.8W	38 lm	41 lm	35 lm	27 lm	28 lm	50 lm
White	5.8W	117 lm	125 lm	105 lm	93 lm	98 lm	158 lm
Yellow	9.3W	141 lm	155 lm	123 lm	111 lm	112 lm	163 lm
Magenta	9.5W	83 lm	90 lm	76 lm	71 lm	67 lm	105 lm
Cyan	10W	135 lm	146 lm	122 lm	105 lm	115 lm	173 lm

DIMENSIONS

SURFACE MOUNT BRACKET

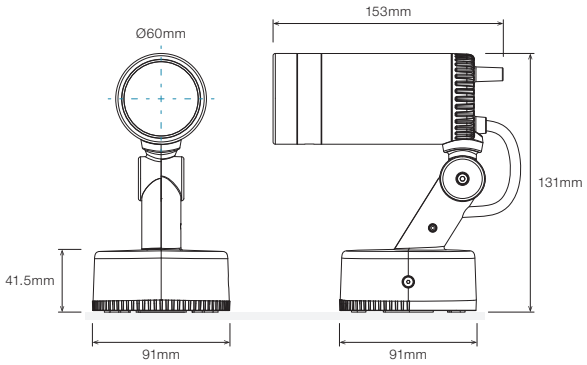

SURFACE MOUNT BRACKET WITH ANTI GLARE VISOR

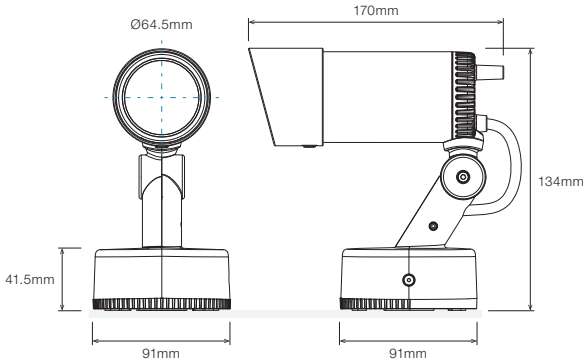

SURFACE MOUNT BRACKET ROTATION

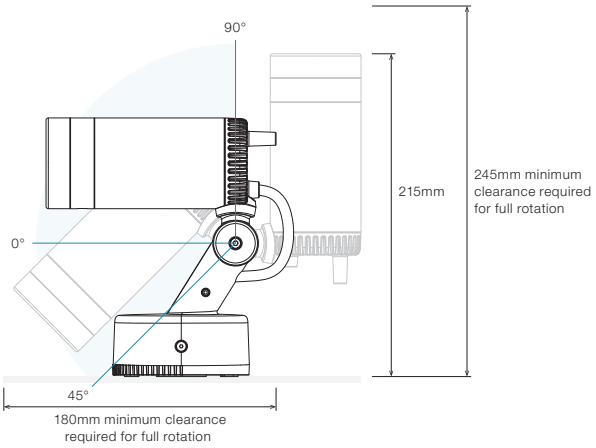

DIMENSIONS

BALL JOINT MOUNTING BRACKET

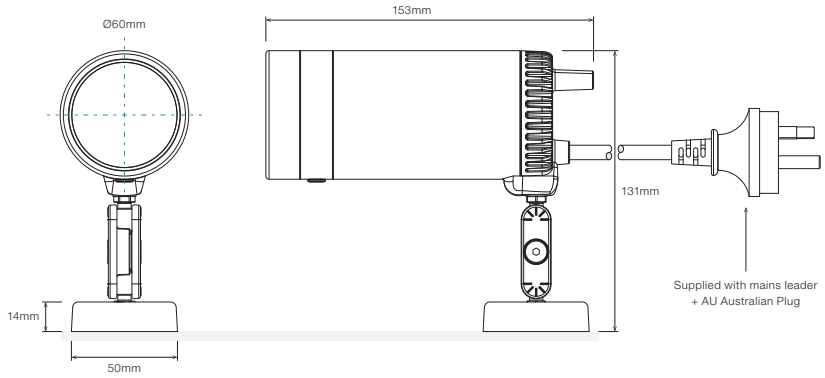

BALL JOINT MOUNTING BRACKET WITH ANTI GLARE VISOR

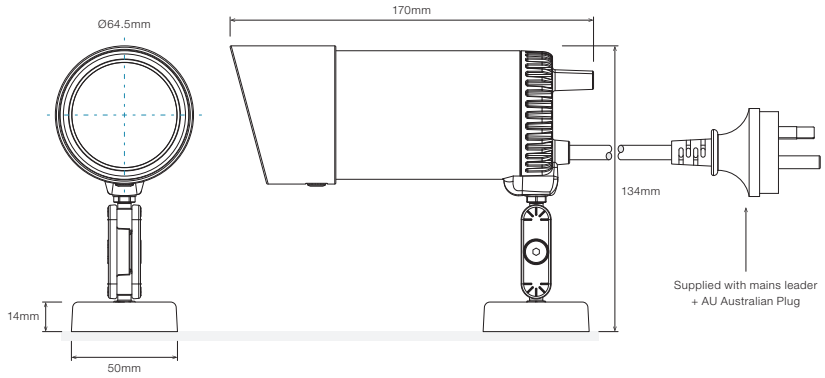

BALL JOINT MOUNTING BRACKET ROTATION

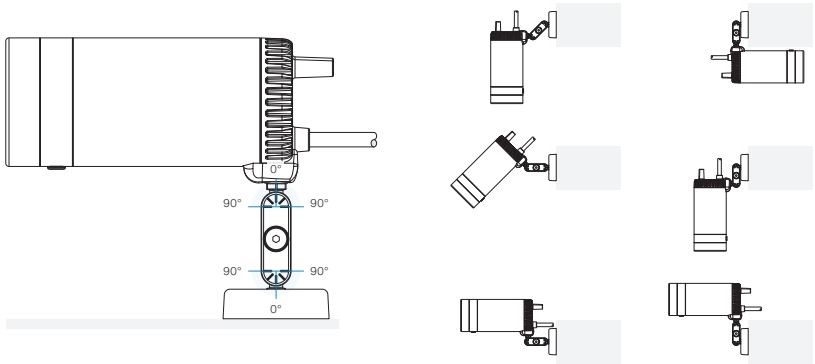

DIMENSIONS

TRACK MOUNTING BRACKET

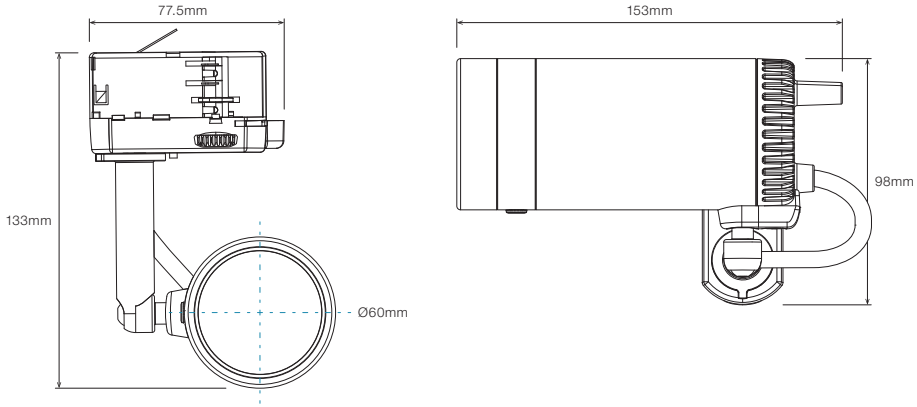

TRACK MOUNTING BRACKET ROTATION

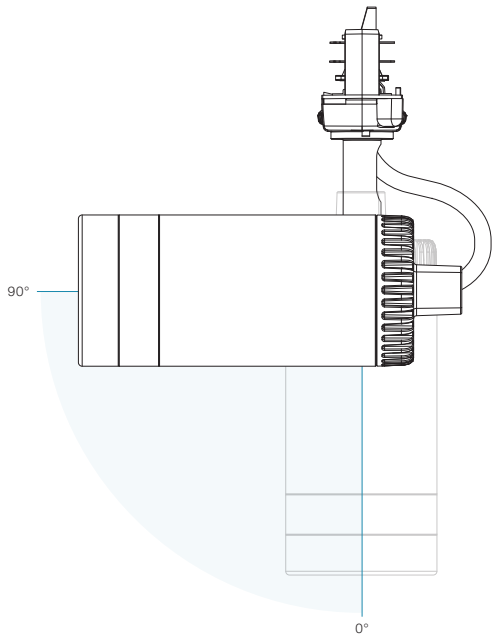

POLAR DISTRIBUTION

OPTIC		POLAR DISTRIBUTION
07D Narrow Beam 7° Beam Angle	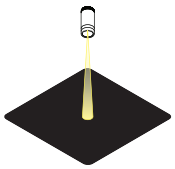	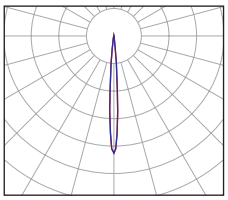
10D Narrow Beam 10° Beam Angle	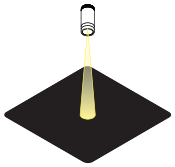	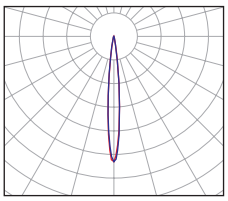
15D Medium Beam 15° Beam Angle	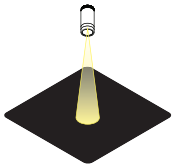	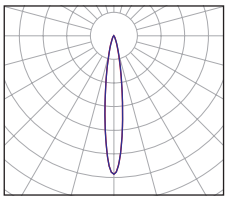
30D Medium Beam 30° Beam Angle	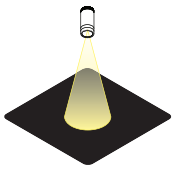	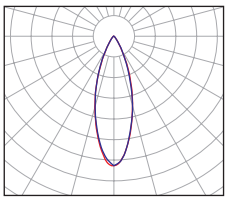
56D Wide Beam 56° Beam Angle	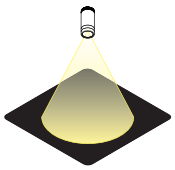	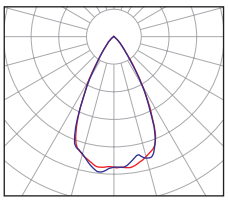
O3511D Oval Beam Oval 35° x 11° Beam Angle	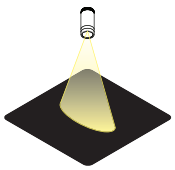	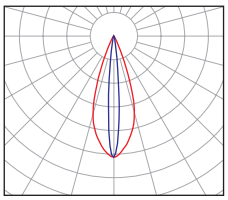

IP RATING

IP66

Fully protected against dust.
Protected against wave-like
water jets from all directions.

WIRING DIAGRAMS

CASAMBI INSTALLATION

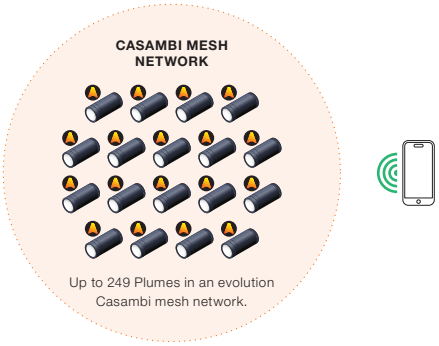

Plume not recommended for Classic Casambi Networks

NEW DALI INSTALLATION

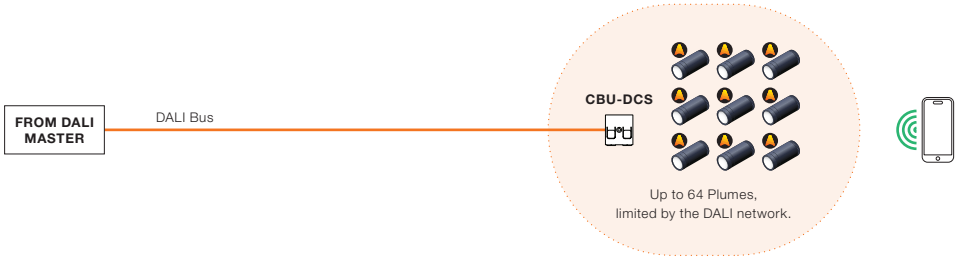

Max total luminaires + input devices is the same for one DALI network (CBU-DCS not included)

EXPAND EXISTING DALI INSTALLATION

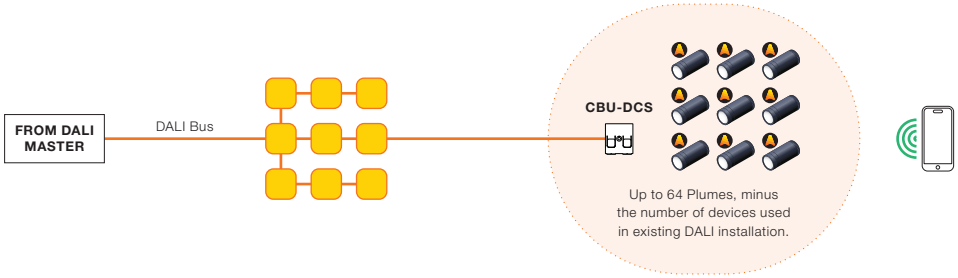

Max total luminaires + input devices is the same for one DALI network (CBU-DCS not included)

DMX INSTALLATION

DMX as casambi scene trigger

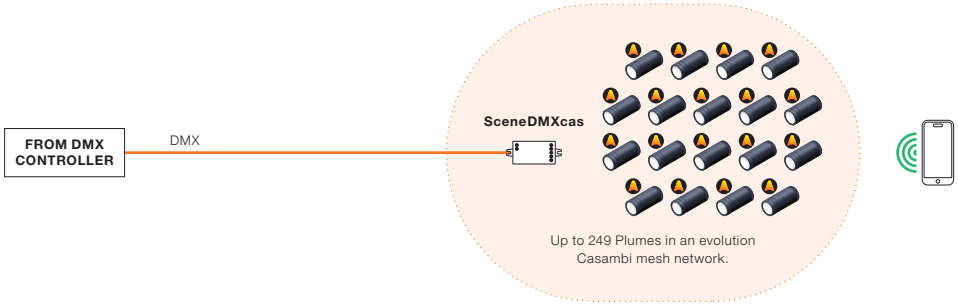

SceneDMXcas provides scene and intensity selection for up to 20 pre-defined Casambi scenes.

The DMX Start Address for each SceneDMXcas is user selectable.

SceneDMXcas can be configured with the Casambi app.

SceneDMXcas requires an external 12 – 24VDC Class 2 power supply.

Please refer to SceneDMXcas documentation for detailed instructions.

ORDERING EXAMPLE

SPT-PLUME 10 AC RGBW - 30D - HL - BLK - SMB

TYPE
OPTIC
INTERNAL LOUVRE
BODY COLOUR
MOUNTING

OPTIC	
07D	7° Beam (Far Throw Collimation)
10D	10° Beam
15D	15° Beam
30D	30° Beam
56D	56° Beam
O3511D	Oval 35° x 11° Beam

INTERNAL LOUVRE	
SC	Standard Clear
HL	Honeycomb Louvre

BODY COLOUR	
BLK	Black Anodised
BRS	Brass Anodised
BNA	Brushed Natural Anodised

MOUNTING	
NA	No Mounting Included
SMB	Surface Mounting Bracket
BJMB	Ball Joint Mounting Bracket
TRMB	Track Mounting Bracket

ACCESSORIES

	PRODUCT CODE	DESCRIPTION
ACCESSORIES		
	ACC-PLUME-AGBL	Anti Glare Visor Black