COOLON

eLi
INSTALLATION & MAINTENANCE INSTRUCTIONS

⚠ ATTENTION

- Please observe / follow the instructions methodically.
- Please ensure the units are handled with extreme care.
- Do not remove product from packaging prematurely. Only remove from packaging when ready for installation.
- Failure to observe installation instructions and handling will void warranty of the product.
- Fittings must be installed by a licensed electrician.
- Before installing, make sure the power supply is switched off or mains cable is disconnected.
- eLi is designed for a wide range of applications, including those with low vibrations such as bridges and fixed metal structures. However, is not designed for heavy-duty environments with excessive vibration.

DIMENSIONS

WITH SURFACE MOUNTING BRACKET

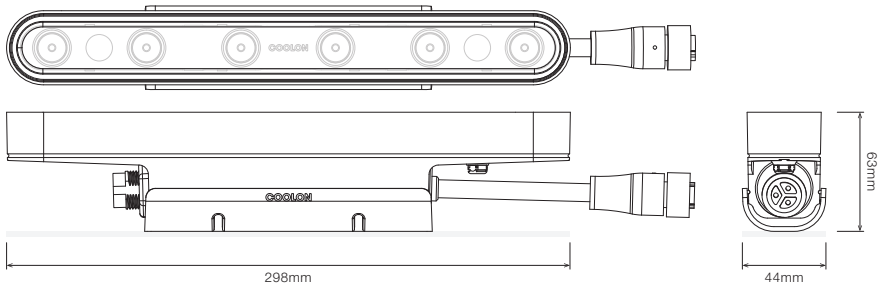

eLi CONTROLLER

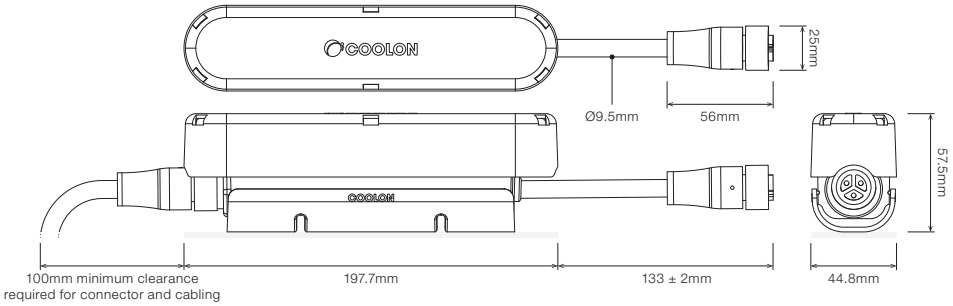

WITH ROTATING BRACKET - TYPE A

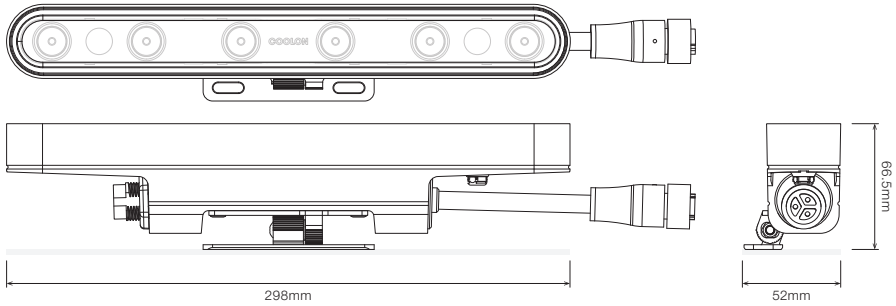

ROTATION WITH ROTATING BRACKET - TYPE A

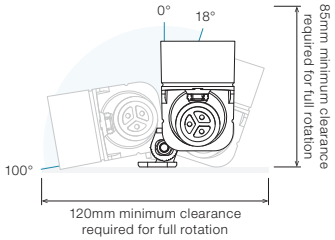

WITH ROTATING BRACKET - TYPE B

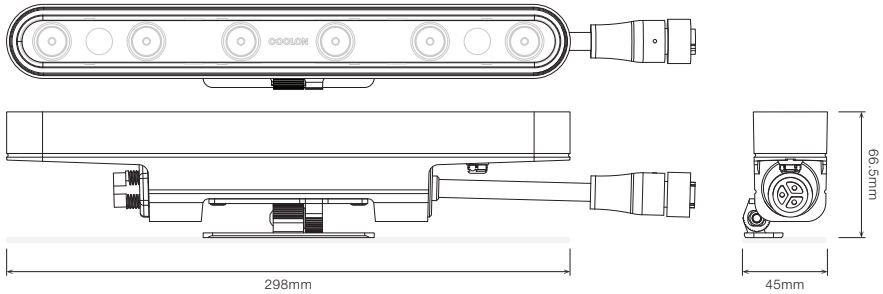

ROTATION WITH ROTATING BRACKET - TYPE B

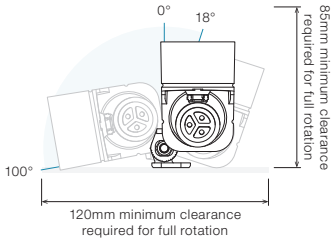

DIMENSIONS

WITH ROTATING BRACKET - TYPE A + GLARE SHIELD

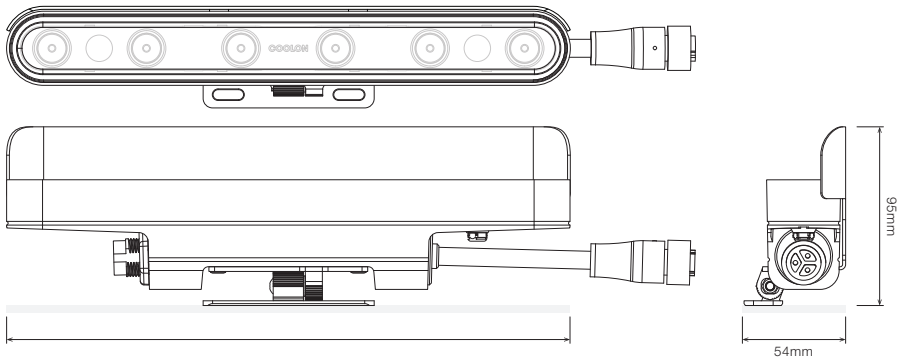

ROTATION WITH ROTATING BRACKET - TYPE A + GLARE SHIELD

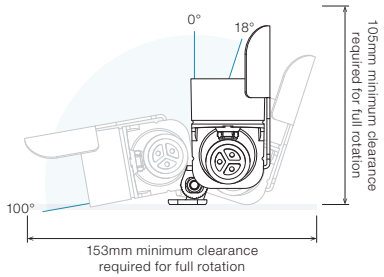

WITH ROTATING BRACKET - TYPE B + GLARE SHIELD

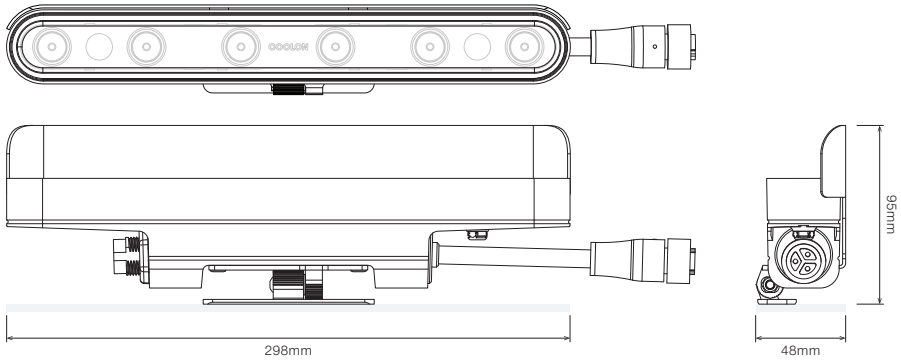

ROTATION WITH ROTATING BRACKET - TYPE B + GLARE SHIELD

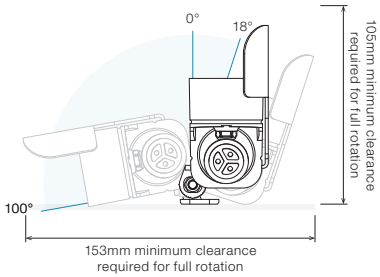

DIMENSIONS

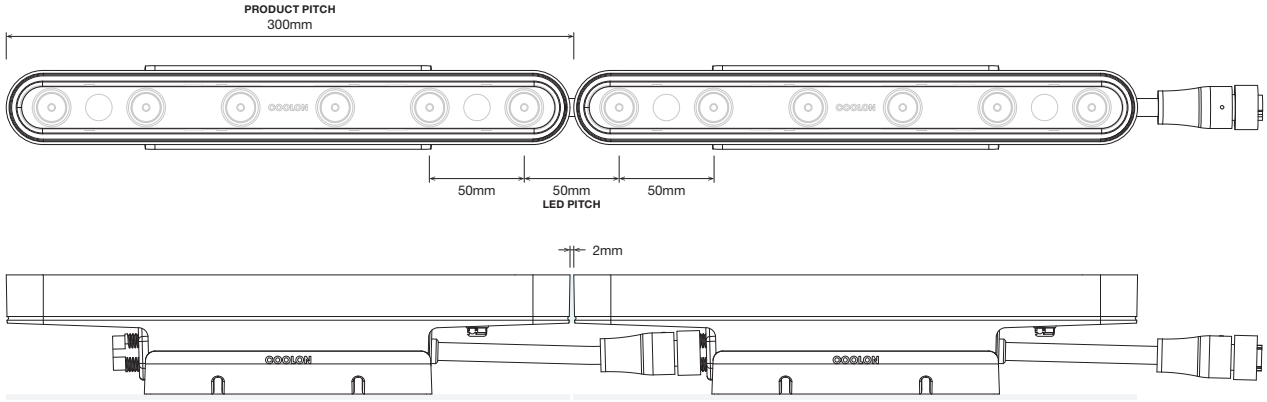

2mm distance between the ends of fittings to keep consistent LED pitch.

INSTALLATION LIMITS

20W Version

Maximum 100 x 300mm fittings per individual run at > 36Vin.

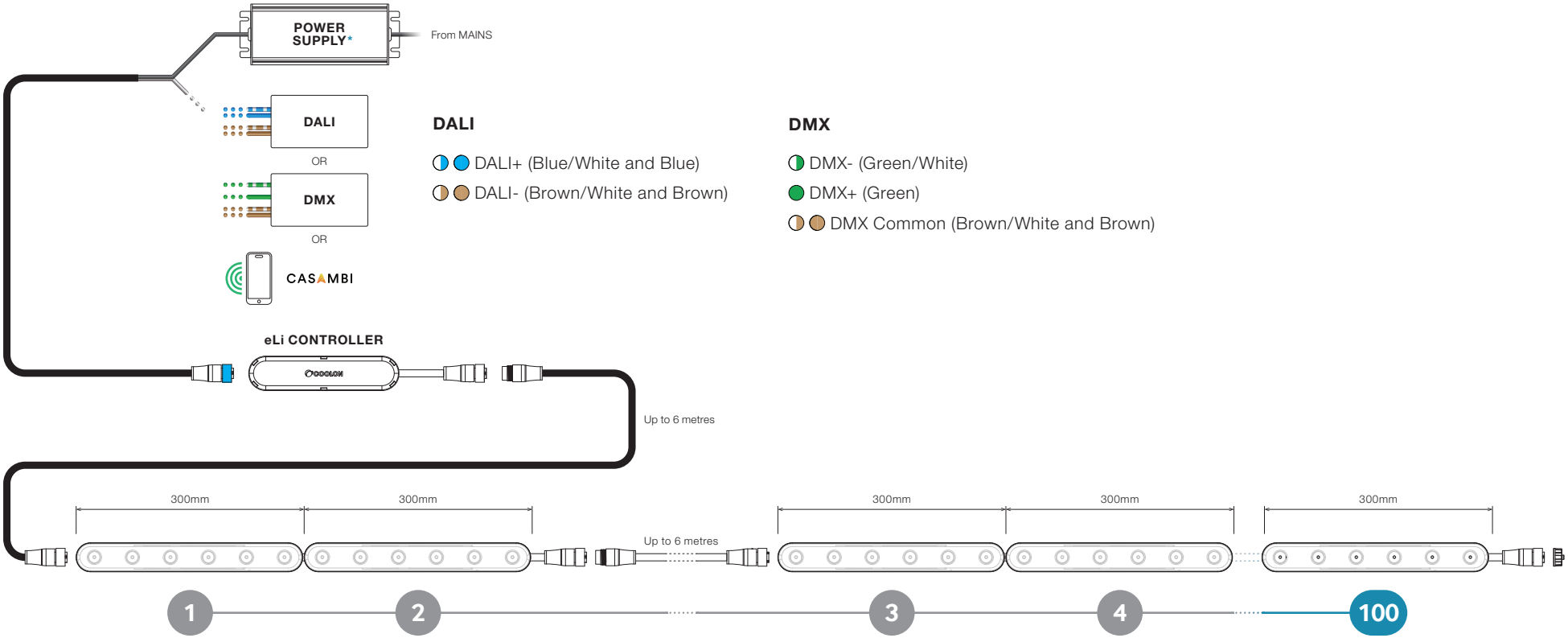

DALI

- DALI+ (Blue/White and Blue)
- DALI- (Brown/White and Brown)

DMX

- DMX- (Green/White)
- DMX+ (Green)
- DMX Common (Brown/White and Brown)

Total run length including leader, jumpers and up to 100 luminaires = 300 metres.

Total illuminated length = 30 metres (100 luminaires).

* Class II / SELV compliant power supply required.

INSTALLATION LIMITS

40W Version

Maximum 50 x 300mm fittings per individual run at > 36Vin.

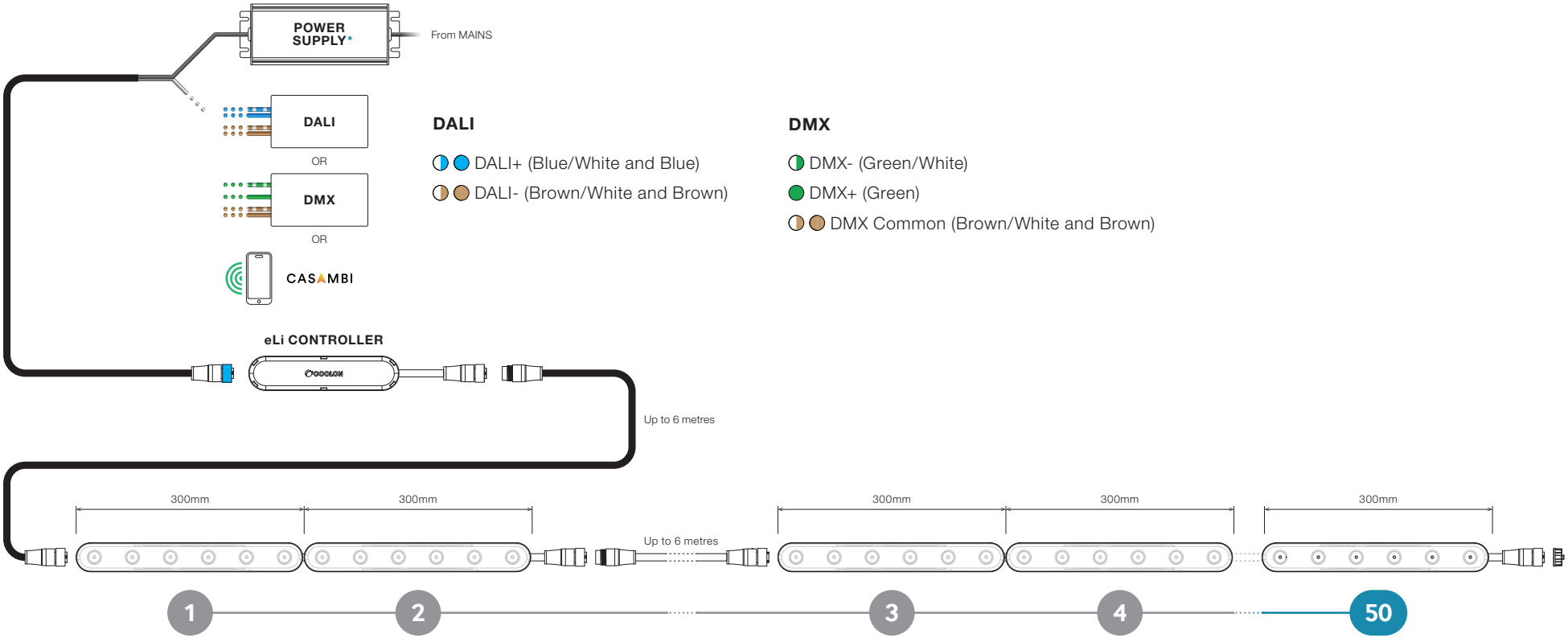

DALI

- DALI+ (Blue/White and Blue)
- DALI- (Brown/White and Brown)

DMX

- DMX- (Green/White)
- DMX+ (Green)
- DMX Common (Brown/White and Brown)

Total run length including leader, jumpers and up to 50 luminaires = 300 metres.

Total illuminated length = 15 metres (50 luminaires).

* Class II / SELV compliant power supply required.

WIRING CONFIGURATION

DALI / DMX Installation

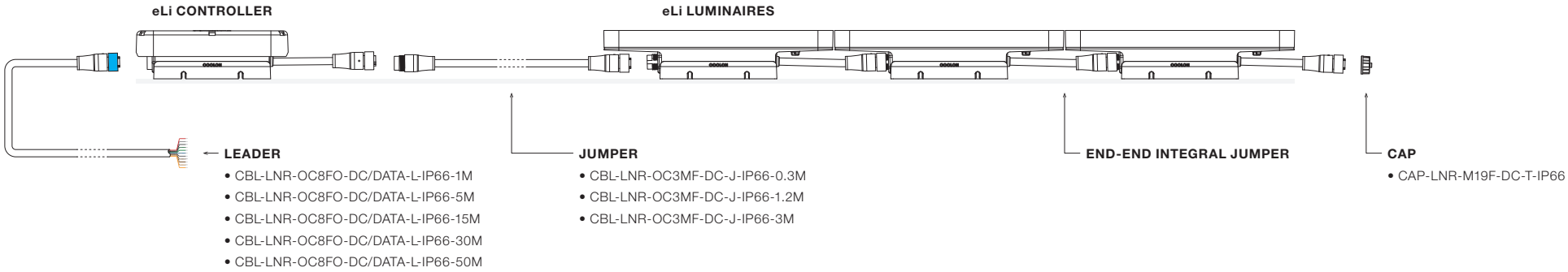

eLi Controller (DALI)

Connector Pin-outs

Input (Male)

Output (Female)

1 V+ (Red) 2 DATA (Output) / NC (Input) (White)
3 V- (Black) 4 NC (Green/White) 5 NC (Green)
6 6 DALI+ (Blue/White and Blue) 7 Shield (Grey)
8 8 DALI- (Brown/White and Brown)

eLi Controller (DMX)

Connector Pin-outs

Input (Male)

Output (Female)

1 V+ (Red) 2 DATA (Output) / NC (Input) (White)
3 V- (Black) 4 DMX- (Green/White)
5 DMX+ (Green) 6 6 DALI+ (Blue/White and Blue)
7 Shield (Grey) 8 8 DALI- (Brown/White and Brown)

eLi Module

Connector Pin-outs

Input (Male)

Output (Female)

1 V+ 2 DATA (Output) / NC (Input) (White)
3 Ground

Orange/White and Orange wires are not connected in any configuration.

6 6 8 8 External DALI control bus and DALI power supply must be SELV-rated.

7 Shield (Grey, Pin 7) should be connected to earth.

WIRING CONFIGURATION

Casambi Installation

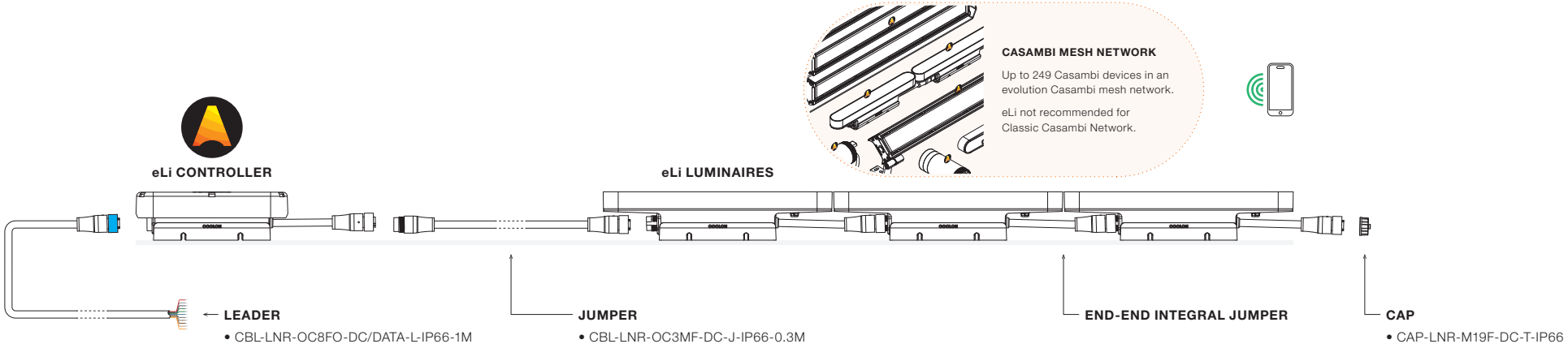

LEADER
- CBL-LNR-OC8FO-DC/DATA-L-IP66-1M
- CBL-LNR-OC8FO-DC/DATA-L-IP66-5M
- CBL-LNR-OC8FO-DC/DATA-L-IP66-15M
- CBL-LNR-OC8FO-DC/DATA-L-IP66-30M
- CBL-LNR-OC8FO-DC/DATA-L-IP66-50M

JUMPER
- CBL-LNR-OC3MF-DC-J-IP66-0.3M
- CBL-LNR-OC3MF-DC-J-IP66-1.2M
- CBL-LNR-OC3MF-DC-J-IP66-3M

END-END INTEGRAL JUMPER

CAP
- CAP-LNR-M19F-DC-T-IP66

eLi Controller (Casambi)

Connector Pin-outs

Input (Male)

Output (Female)

1 V+ (Red) 2 NC (Output) / NC (Input) (White)
3 V- (Black) 4 NC (Green/White) 5 NC (Green)
6 6 NC (Blue/White and Blue) 7 NC (Grey)
8 8 NC (Brown/White and Brown)

eLi Module

Connector Pin-outs

Input (Male)

Output (Female)

1 V+ 2 DATA (Output) / NC (Input) (White)
3 Ground

Orange/White and Orange wires are not connected in any configuration.

WIRING CONFIGURATION

No Control Installation (eLi SW only)

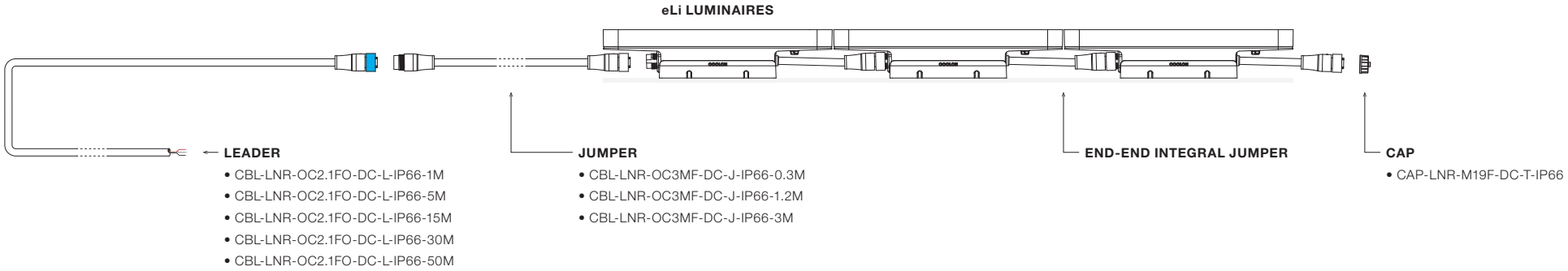

eLi Module

Connector Pin-outs

Input
(Male)

Output
(Female)

❶ V+ ② DATA (Output) / NC (Input) (White)

❸ Ground

CONNECTION

Before installation begins, please ensure that you understand the fitting layout as per luminaire schedule.

Ensure power is disconnected before connecting fixtures.

Connecting cables between fixtures and controllers requires no tools. Simply push until the connectors click and lock in place.

TERMINATION CAPS

Outdoor installations require one termination cap for each run of fixtures.

The fixtures with termination caps will be packaged separately and clearly labelled.

Attempting to remove a termination cap will void the warranty.

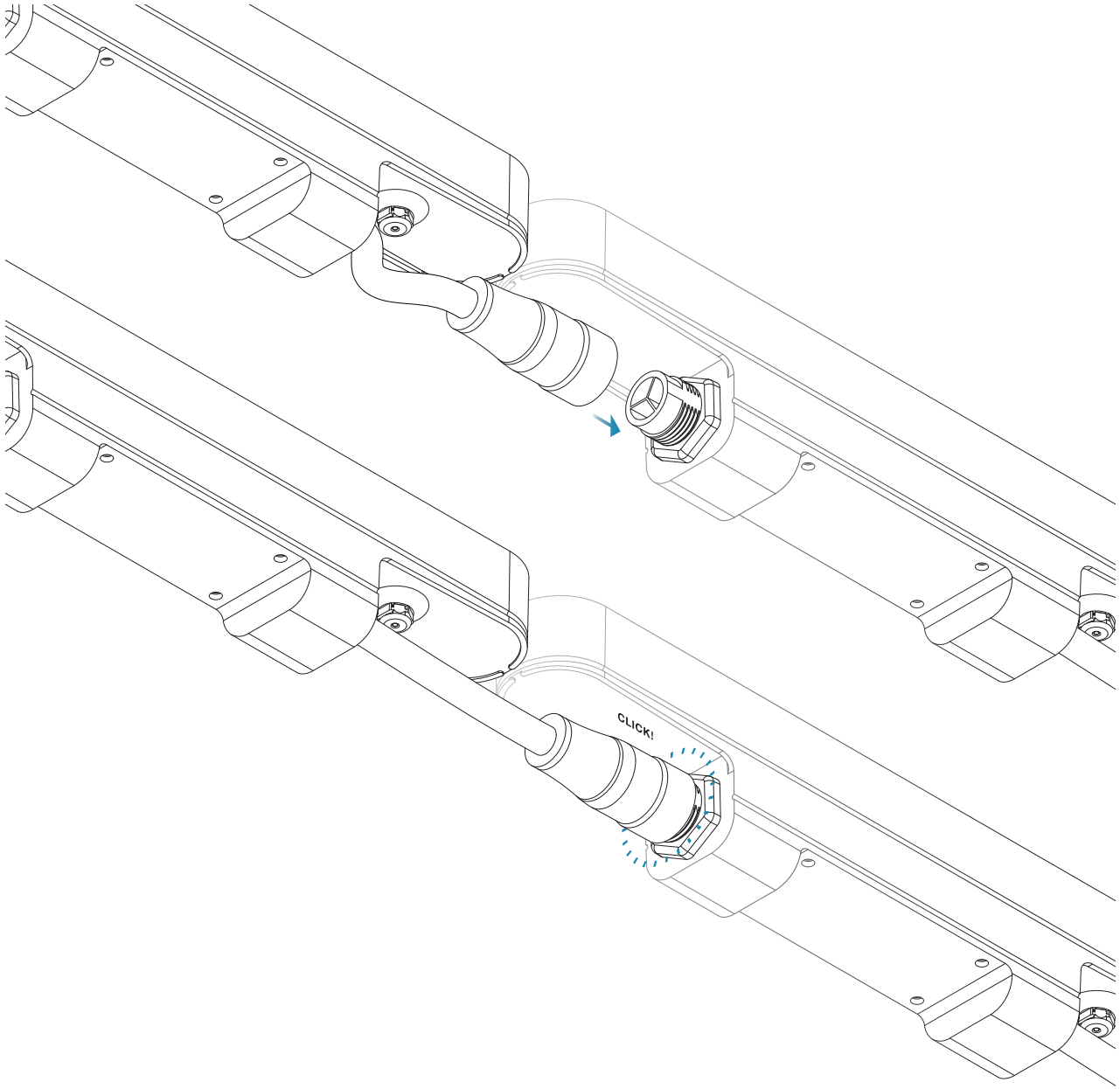

MOUNTING FOOTPRINTS

SMB Surface Mounting Bracket

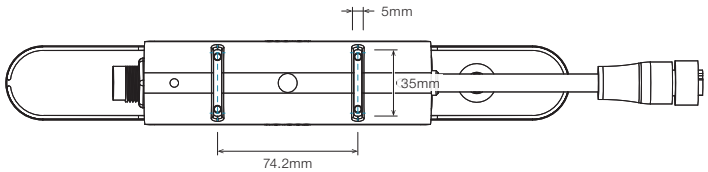

MINIMUM RECOMMENDED FASTENERS PER LUMINAIRE:
2 x M5 bolts for single luminaires

MOUNTING BRACKET MATERIAL:
Polycarbonate

APPLICATION:
Low vibration

RBA Rotating Bracket (Type A)

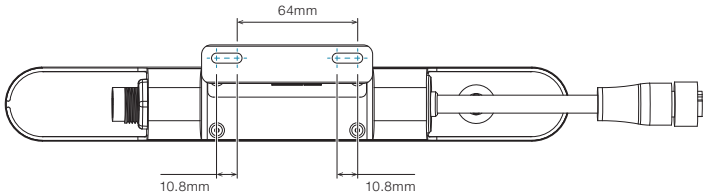

RBB Rotating Bracket (Type B)

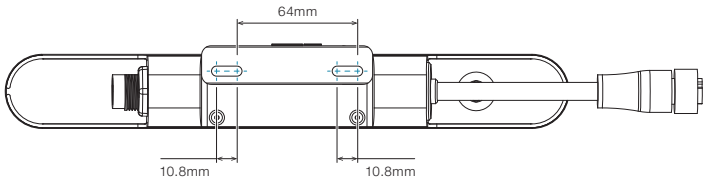

MINIMUM RECOMMENDED FASTENERS PER LUMINAIRE:
2 x M5 bolts for single luminaires

MOUNTING BRACKET MATERIAL:
Aluminium

APPLICATION:
Low vibration

INSTALLING THE SURFACE MOUNTING BRACKET

STEP 1

Prepare the surface mounting bracket and two screws (Ø5mm with a minimum length of 20 mm)

Measure out the spacing between each mounting bracket. Spacing for eLi is 300 mm.

Secure the brackets with screws on timber or metal surface.

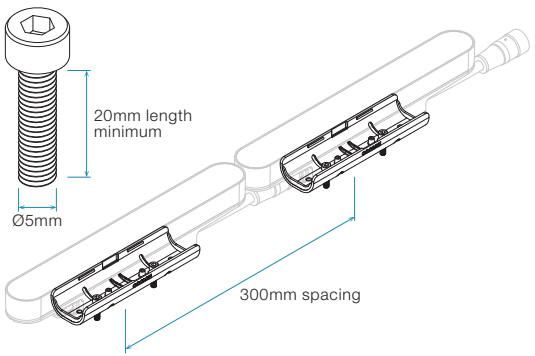

STEP 2

Tilt eLi module on one edge and secure the other edge by latching to mounting bracket.

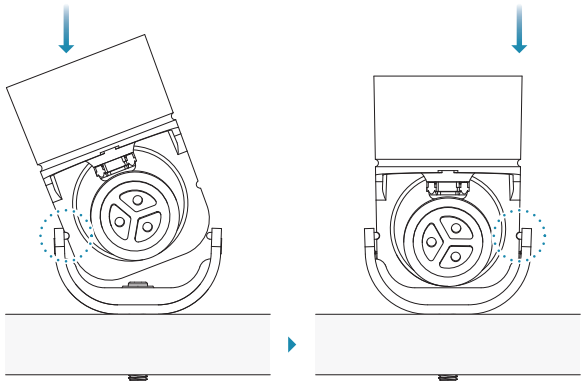

INSTALLING THE ROTATING MOUNTING BRACKET (TYPE A & TYPE B)

Four mounting holes are provided on the base of each eLi module for the rotating mounting bracket and glare shield. When the power feed in is on the left, the mounting bracket is installed on the front two mounting holes by default, however depending on the installation this can be changed.

STEP 1

Loosen the bracket with the Allen key and rotate it forward so the mounting points can be accessed. Prepare the screws (Ø4mm with minimum length of 16mm).

Measure out the spacing between each mounting bracket. Spacing for eLi is 300 mm.

Secure brackets with screws on surface.

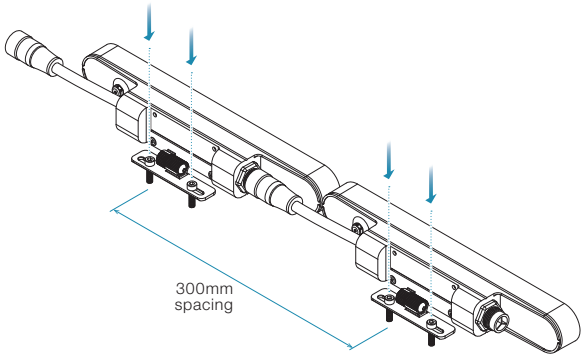

STEP 2

Rotate the module to the desired angle and use the Allen key to tighten the bracket and secure it in place.

INSTALLING THE GLARE SHIELD

Four mounting holes are provided on the base of each eLi module for the rotating mounting bracket and glare shield. When the power feed in is on the left, the glare shield is installed on the back two mounting holes by default, however depending on the installation this can be changed.

STEP 1

Remove the screws securing the glare shield and rotating mounting brackets.

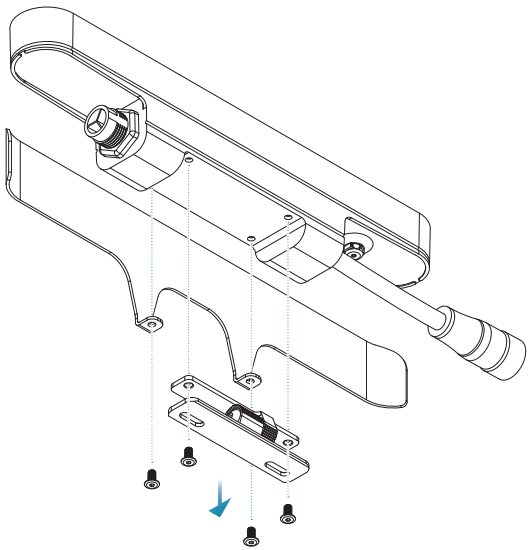

STEP 2

Swap the glare shield and mounting bracket positions on the module.

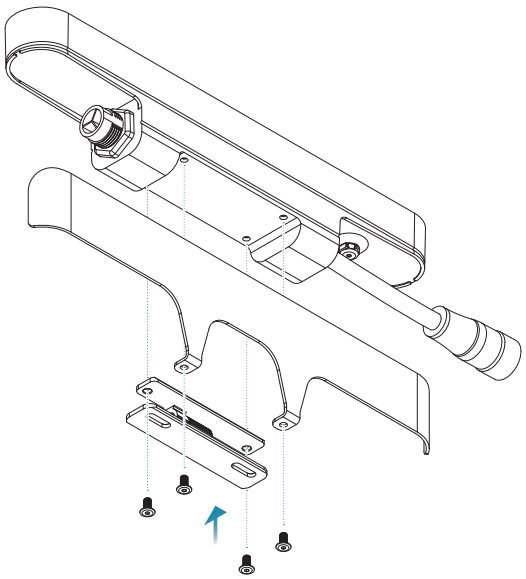

STEP 3

Place the screws back in the mounting holes and tighten (4-5 Nm) the screws clockwise to secure the mounting brackets and glare shields.

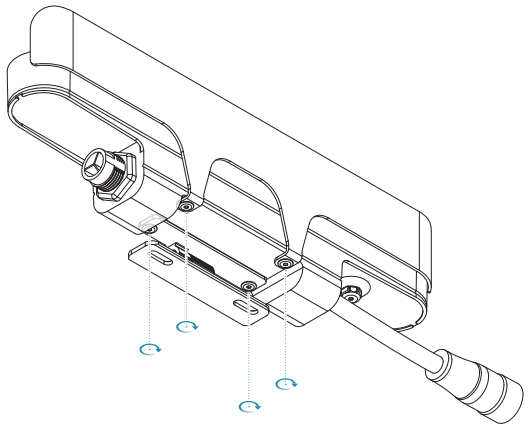

POSITIONING ON ROUND COLUMNS

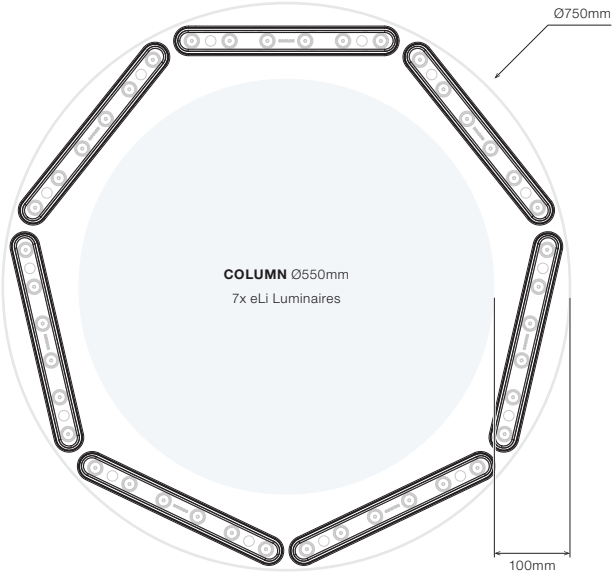

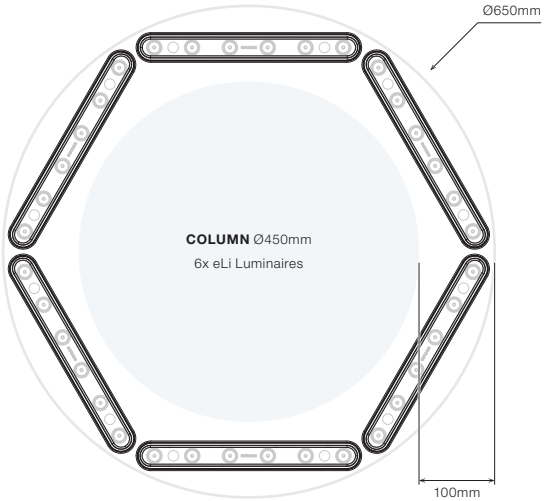

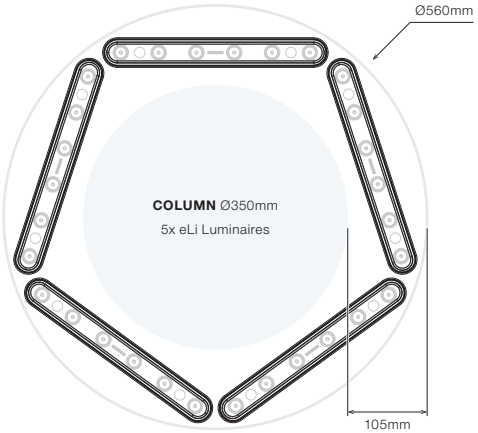

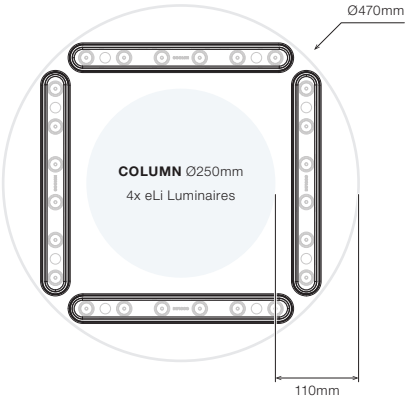

MAINTENANCE GUIDE

NOTE

All inspections and maintenance must be carried out in accordance with site safety procedures and applicable electrical regulations. Always isolate power before working near electrical equipment.

1. OVERVIEW OF PRODUCT CHARACTERISTICS

These features help ensure long service life and minimal maintenance requirements:

- Fully sealed luminaire body. No user-serviceable parts.
- High-grade powder coated aluminium body, UV stable polyurethane encapsulation and IP-rated Push-lock connectors.
- Specifically designed for outdoor environments.
- Minimal maintenance required other than regular visual checks and cleaning when necessary.

2. HALF-YEARLY VISUAL INSPECTION

Aspects to be inspected without the need for any tools. Escalate immediately if any of the following are present:

2.1 BUILDUP OR OBSTRUCTION ON THE ILLUMINATED SIDE

- Dirt, dust, spider webs, other insects, debris, paint overspray, stickers, bird droppings, foliage, etc.
- Anything significantly blocking the light warrants escalation.

2.2 OVERALL LUMINAIRE INTEGRITY

- Cracks in the diffuser or housing.
- Loose, damaged or structural instability of brackets and or mountings.
- Significant rust or corrosion.
- Impact damage.
- Moisture condensation or water pooling inside the lens cavity (light fogging may happen; heavy droplets warrant escalation).
- Water pooling around the luminaire.
- Evidence of tampering.

2.3 CABLES AND CONNECTORS

- Cables pinched, frayed, or chafing on metal edges.
- Exposed copper or insulation cracking.
- Connectors with visible damage.
- Connectors aren't fully seated and mechanically locked.
- Water pooling around connectors or low-lying cable runs.

2.4 ELECTRICAL ISSUES

- Recurrent tripping, flickering, or non-functional sections.
- Signs of overheating (burn marks, deformation, etc.).

2.5 SURROUNDINGS

- Check that building works, landscaping changes, or cleaning contractors have not introduced risks to luminaires (e.g., silicone residue, accidental painting of the diffuser, new water jets pointed directly at fittings).

MAINTENANCE GUIDE

3. CLEANING (WHENEVER NECESSARY AS PER SECTION 2)

Purpose: To ensure safe cleaning without damaging the polyurethane optical encapsulant.

3.1 GENERAL GUIDELINES

- Clean the luminaire only when powered off and cool to touch.
- Avoid excessive rubbing or abrasive tools.
- Do not allow any cleaning agent to sit or soak on the encapsulated surface.
- Always test any unfamiliar cleaner on a small inconspicuous area first.

3.2 APPROVED CLEANING AGENTS

The following products are safe for regular cleaning when used as directed:

Primary Recommended Cleaners:

- Warm water and neutral pH soap (diluted dishwashing liquid is ideal).
- Commercial pH-neutral surface cleaners (non-solvent type).

Special Cases:

- Isopropyl Alcohol (IPA), ≤70%, is permitted for quick spot cleaning
  - Apply for less than 10 seconds
  - Wipe immediately with water afterward
  - Do not soak or repeat excessively

3.3 CLEANING PROCEDURE

Step 1 – Preparation

i. Disconnect power to the luminaire.
ii. Allow the unit to cool.
iii. Gently blow off loose dust or particles (compressed air or soft brush).

Step 2 – Washing

i. Prepare a cleaning solution of warm water + mild detergent.
ii. Moisten a soft cloth or sponge.
iii. Wipe the polyurethane encapsulated area with light to moderate pressure.

Step 3 – Rinsing

i. Rinse the surface with clean water to remove any soap residue.

Step 4 – Drying

i. Wipe dry using a lint-free cloth.
ii. Ensure no cleaner remains in edges or around the gasket areas.

3.4 PROHIBITED CLEANING AGENTS

The following cleaners must not be used, as they can permanently damage polyurethane encapsulation:

Strong Solvents

- Acetone
- MEK
- MIBK
- Toluene / Xylene
- Paint thinners
- Petrol, kerosene, diesel
- White spirits or mineral turpentine

Alcohols (excessive exposure)

- IPA or ethanol when used for soaking or long dwell times
- Methanol (avoid entirely)

High-pH or Low-pH Cleaners

- Caustic or alkaline degreasers
- Acidic descalers
- Industrial cleaners containing strong acids or alkalis

Abrasives

- Scouring pads
- Dry abrasive powders
- Sanding or cutting tools

3.5 ENVIRONMENTAL CONSIDERATIONS

- If the luminaire has been exposed to mining grime, diesel mist, or hydrocarbon contamination, clean immediately using only approved neutral cleaners.
- Do not store cleaned luminaires in sealed containers before fully dry.

3.6 WARRANTY NOTE

Damage to the polyurethane caused by unapproved cleaning agents or abrasive methods is not covered under warranty.

CASAMBI READY

Casambi is designed specifically for lighting and allows the user to easily control / automate a space using their phone, tablet or wireless switch.

For more information, please visit https://casambi.com/

For a range of switches please visit https://casambi.com/ecosystem/ and explore the options.

For use with a tablet and smart phone, download the Casambi app and follow the easy to use instructions to pair with your luminaire.

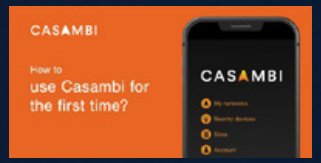

How to use Casambi for the first time
https://youtu.be/H5DRQ2vCQDw

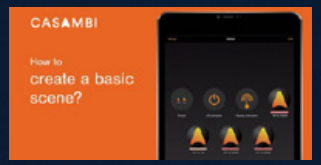

How to create a basic scene
https://youtu.be/RGXkXU_4r2A

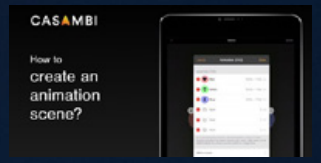

How to create an animation scene
https://youtu.be/0RJ3Hvwvtpo