EMERGENCY TUNNEL LED

INDUSTRIAL LED LUMINAIRE

COOLON
www.coolon.com.au

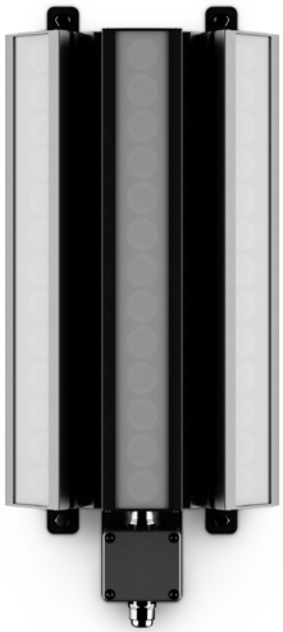

APPLICATIONS

· Mine Tunnels
· Industrial Walkways

Unsurpassed reliability meets unrivalled engineering and design excellence with Coolon's TunnelLED Luminaire.

Specifically designed to withstand the most heavily vibrating environments, and most extreme industrial conditions, the TunnelLED Luminaire boasts optimum failsafe redundancy and delivers a level of CRI emitted light high enough to emulate natural daylight conditions in a stable and flicker free solution, free of dangerous stroboscopic effects.

Designed as lighting luminaries for industrial walkways, tunnels and passageways, the TunnelLED Luminaire is the ideal replacement for conventional gas discharge lighting technologies, and leaves conventional lighting solutions far behind.

Coolon's range of industrial LED lighting products come with 3 Years Manufacturer's Warranty.

TECHNICAL SPECIFICATIONS

Luminaire

Luminous Flux	2500 - 3600 lm
Power Consumption Rapid charging w/ Light ON Rapid charging w/ Light OFF Battery fully charged	 <180W <160W <80W
Power Supply	Meanwell 24VDC 240W
Operating Voltage Range	90-264VAC, 127-373VDC
Frequency Range	47-63Hz
Leakage Current	<0.75mA/240VAC
Charge Time	2 hours - 70% 20 hours - 90%
Battery Type	Lead Acid Gel
Emergency Discharge Time	Over 2 hours
IP Rating	IP66
Power Factor	>0.88
Body	Stainless Steel
Weight	5.7kg (Luminaire) 13kg (Emergency Pack)

Light Module

Max. Operating Voltage	26V
Min. Operating Voltage	23V
Body	Aluminium Alloy* (Marine Grade Black Anodised)

COOLON
Phone 1300 287 533
Fax 1300 287 522
Email sales@coolon.com.au

DESIGNED & MANUFACTURED IN AUSTRALIA

DEFENCE RECOGNISED SUPPLIER
Department of Defence

DIMENSIONS

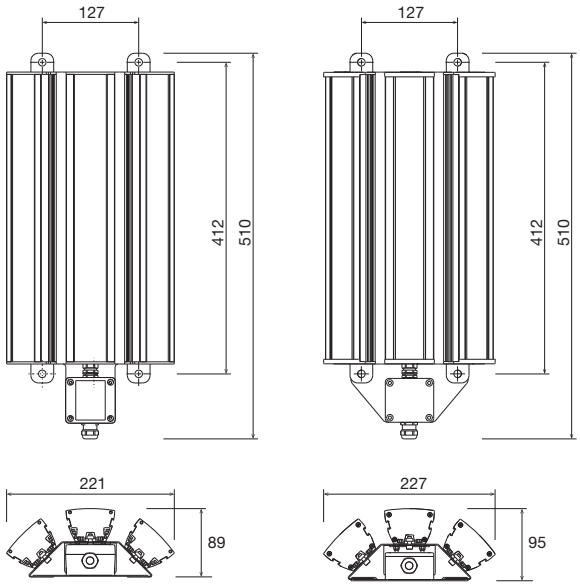

Standard Version

Stainless Steel Version

ILLUMINANCE AT DISTANCE

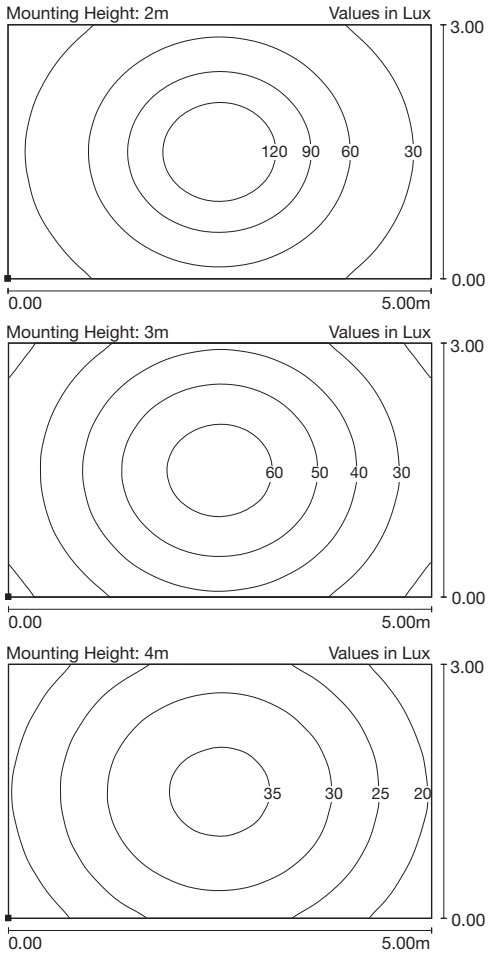

POWER CONSUMPTION

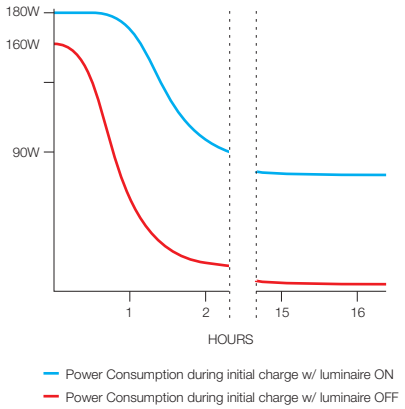

POLAR DISTRIBUTION

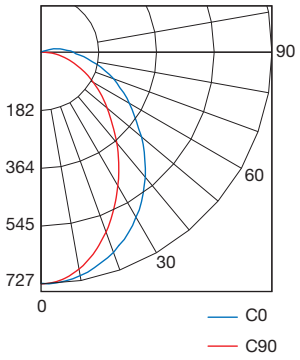

ZONAL LUMEN SUMMARY

Zone Lumens

0-10	68.61
10-20	196.03
20-30	295.77
30-40	355
40-50	369.37
50-60	347.72
60-70	297.45
70-80	226.57
80-90	150.46
90-100	95.85
100-110	56.13
110-120	24.55
120-130	4.06
130-140	0

Results measured by independant photometric lab

ORDERING INFORMATION

ORDERING EXAMPLE

EMP - TL36 - L30 - D[1]

EMP	TL36	L30	D
EMERGENCY PACK	PRODUCT CODE	OPTICS	OPTIONS

PRODUCT CODE

TL36	Tunnel LED Standard Version
TL36SS	Tunnel LED Stainless Steel Version

OPTIONS

D	Diffused Cover
C	Clear Cover

OPTICS

L30	Internal Lens 30° Beam Angle

[1] If not specified, diffused cover and standard configuration will be supplied

Specifications are subject to change. For the latest version of the data sheet, please visit www.coolon.com.au